ITEA 2012 Test Instrumentation Workshop

Las Vegas May 15-18, 2012

PHYSIOLOGY AND MEASUREMENT OF EXPLOSIONS IN AIR AND UNDERWATER

Patrick L. Walter, Ph. D.

Professor of Engineering at TCU

Senior Measurement Specialist at PCB Piezotronics, Inc.

TCU

PCB PIEZOTRONICS INC.

Dynamic Pressure Measurements

Initially Focus on the Test Environments

TCU

PCB PIEZOTRONICS INC.

Explosions in Air

- Types:
  - Freely expanding shocks in air
  - Constrained shocks
    - Shock tubes
    - Other vessels

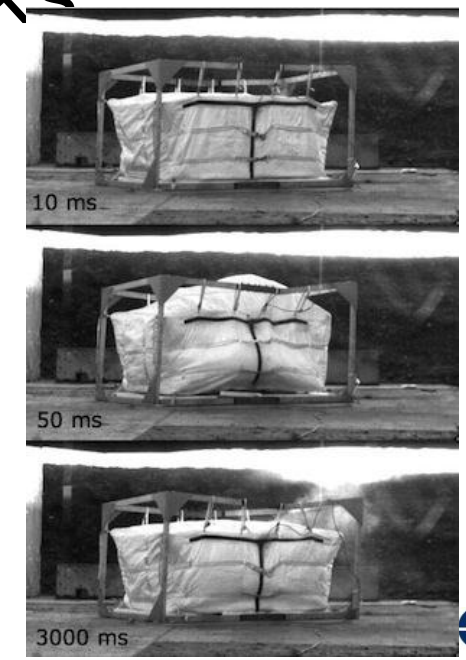

Free Expanding Shock

Explosions Defined

- Explosion: A process by which a pressure wave of finite amplitude is generated in air by a rapid release in energy.

  - Energy sources:
    - chemical materials
    - nuclear materials
    - stored energy in gas (boilers, gas storage bottles, muzzle blast)
    - electrical (spark gap, vaporization of a wire/film)

Focus: Freely Expanding Air Shocks (Nonlinear Process)

- The properties of air as a compressible gas cause the front of the disturbance to steepen as it passes through the air (i.e., "shocks up").
  - Discontinuities occur across the shock front in:
    - pressure
    - density
    - temperature
  - Shock front moves supersonically

Focus: Freely Expanding Air Shocks (Nonlinear Process)

Shock wave moving outwardly

Pressures of Interest in an Air Blast

- Static overpressure: Static overpressure is the transient differential pressure in the air blast relative to the existing ambient pressure just before shock wave arrival. It is measured with a transducer oriented in a plane parallel to the flow velocity vector.
  - Specifically measured with flush surface ground probe, disc probe, and pencil probe.

Why Measure Static Overpressure?

- The damage potential of a blast wave is associated with both the force it exerts on an object and the duration over which the force is applied.

  - We typically try to measure:
    (1) the peak static overpressure, and
    (2) the total impulse per unit area of the blast wave.

  - Structures are usually more sensitive to the effects of impulse than to peak pressure due to the quarter wavelength of the natural frequency of most structures being longer than the duration of the blast wave [$(\lambda_1/4) > T$].

Underwater Explosion Example

Note: underwater explosions will be discussed later

TCU
PCB PIEZOTRONICS INC

First: The Fundamentals

The Sensing Technology

TCU
PCB PIEZOTRONICS INC.

Transducer Technologies of Interest

Piezoelectricity: results from no center of charge symmetry (from Greek word for "squeeze electricity")

piezoelectric constant $d_{ij} = q/F$
i = electrical direction
j = direction applied force

d_{33} = width expansion
d_{31} = length expansion

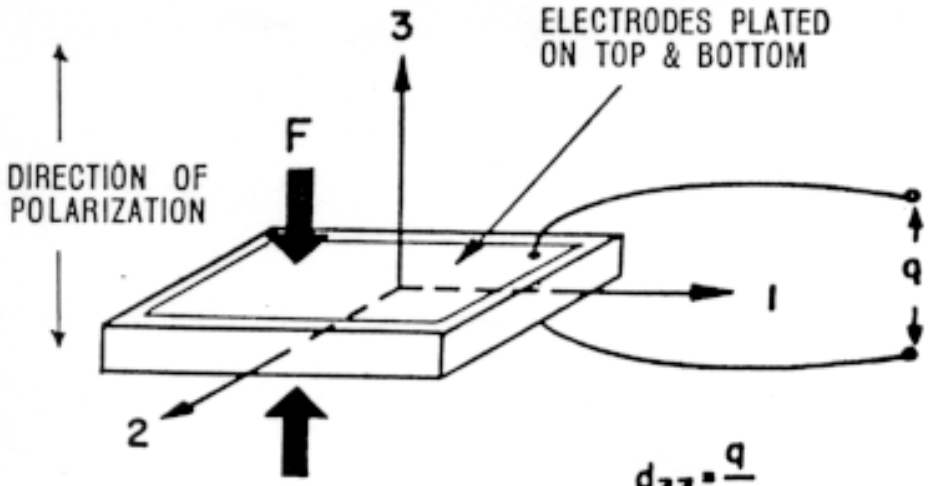

The Process (quartz) [1/2]
Direct Piezoelectricity

axes identification

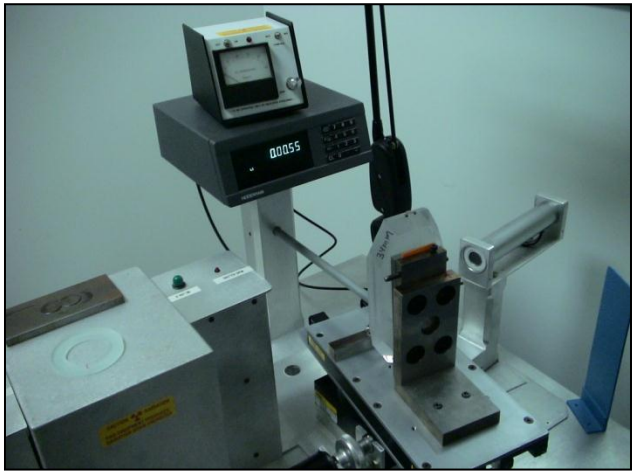

machining

TCU

PCB PIEZOTRONICS INC

The Process (quartz) [2/2]
Direct Piezoelectricity

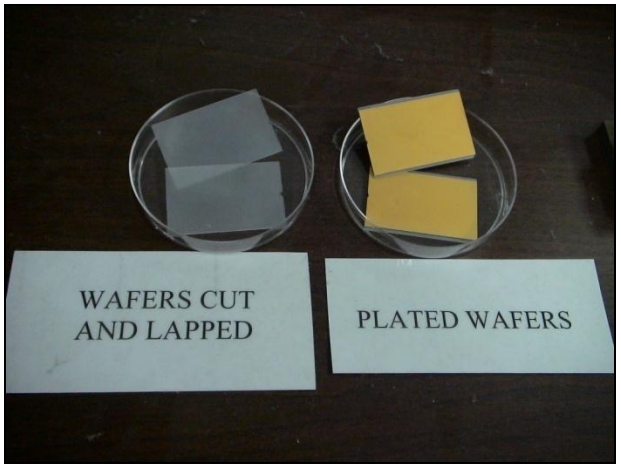

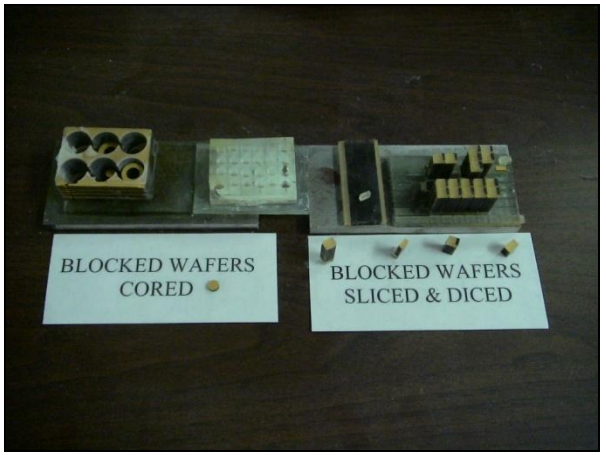

TCU

PCB PIEZOTRONICS INC

Direct Piezoelectricity (quartz)

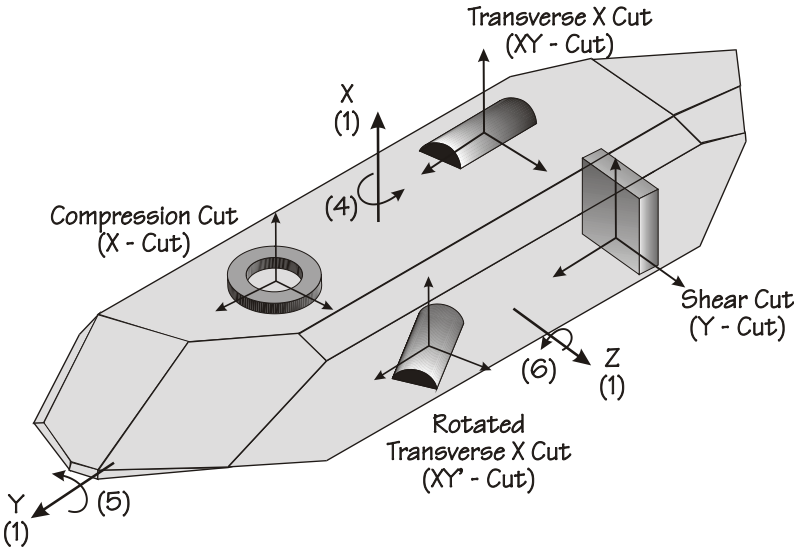

- Advantages
  - Naturally piezoelectric
    - Excellent long term stability/no aging
  - Non-pyroelectric
    - Works well in thermally active environments

TCU
PCB PIEZOTRONICS INC

Direct Piezoelectricity (quartz)

- Low capacitance
  - High voltage sensitivity (V=Q/C)
- Low temperature coefficient
  - Little deviation over wide temperature range
- High stiffness
  - Extremely linear

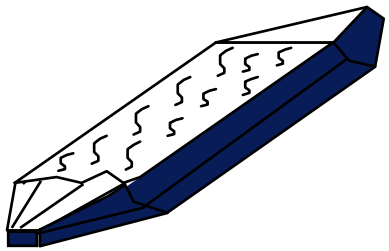

Direct Piezoelectricity (quartz)

- Limitations
  - Non-piezoelectric above 1060 F (573 C)
    - Low charge output (pC)
    - Not as effective in low-noise, charge-amplified systems as typical ceramic
    - Pressure/force transducers use multiple plates for this reason
  - Limited Geometry
    - Can only cut crystal in certain number of ways and have it still remain piezoelectric

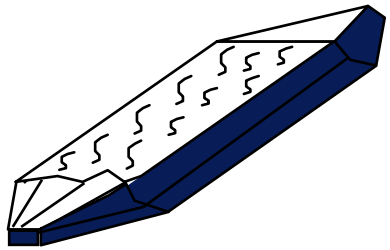

TCU

PCB PIEZOTRONICS INC

Ferroelectric Ceramics

- Man-made material
- Lead-zirconate titanate (PZT), barium titanate, lead metaniobate, bizmuth titanate
- Polycrystalline structure
  - Naturally isotropic (physical and electrical properties the same in all directions)
  - Naturally non-piezoelectric
    - Becomes piezoelectric through high voltage "poling"

TCU
PCB PIEZOTRONICS INC

Ferroelectric Ceramics [1/4]

Powders mixed and screened

Compacted into pellet form

TCU
PCB PIEZOTRONICS INC

Ferroelectric Ceramics [2/4]

Placed in high temperature oven, > 1200° C typical

Ferroelectric Ceramics [3/4]

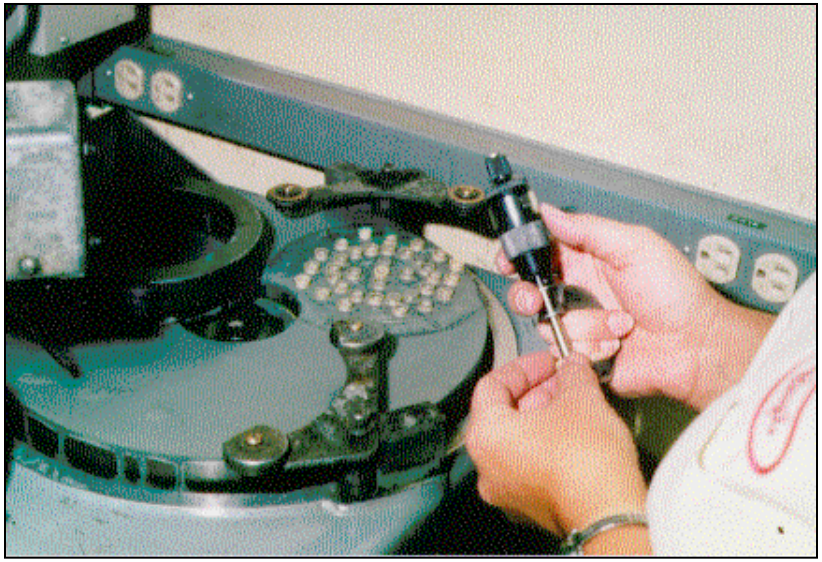

Precision grinding

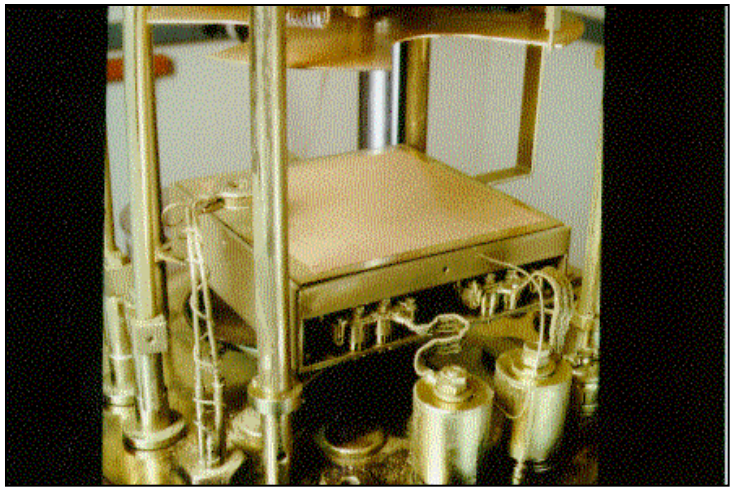

Electroding (gold or nickle-silver)

Ferroelectric Ceramics [4/4]

Poling at .2-10KV
200-400° F

Before poling

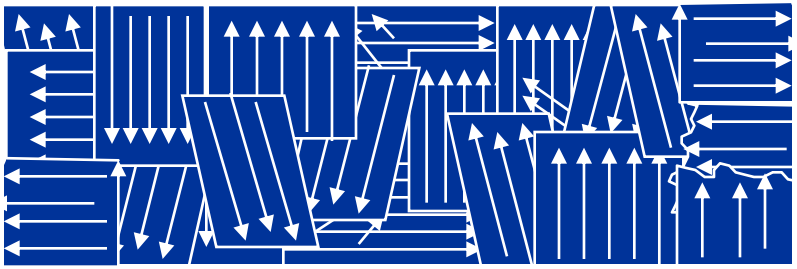

+ +

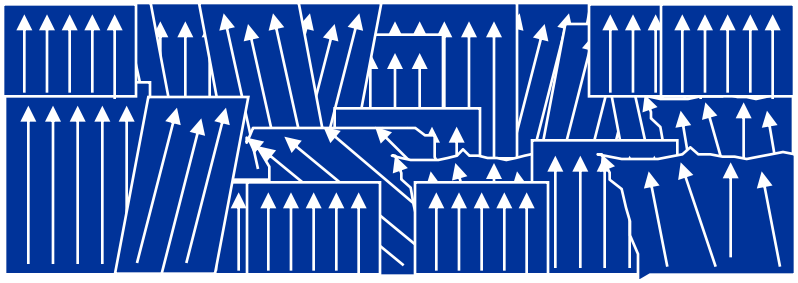

- -

After poling

Impedance testing

Ferroelectric Ceramics

- Advantages
  - High charge output (pC)
    - Excellent for use with tests requiring high sensitivity and/or low-noise, charge-amplified systems
  - Unlimited geometry
    - "Poling" occurs after shaping
  - Better resolution and frequency response than comparable size quartz sensors – lower noise
  - Miniaturization

Ferroelectric Ceramics

- Limitations
  - Pyroelectric
    - Unwanted output generated by a thermally active environment
  - Larger temperature coefficient than quartz
    - Electrical properties are dependent on temperature
  - Artificially Polarized
    - Exhibit temporary/permanent changes under large mechanical, thermal or electrical shock

Upper Useful Operating Temperature for Piezoelectric and Ceramic Materials

- PZT (ferroelectric ceramic): 500 deg. F.
- Quartz (direct piezoelectric) (SiO_2) 760 deg. F.
- Bismuth Titanate (ferroelectric ceramic) ($Bi_4Ti_3O_{12}$) 900 deg. F.
- Gallium Orthophosphate (direct pieoelectric) ($GaPO_4$) >1250 deg. F.
- LGT Langatate (lanthanum gallium tantalate) ($La_3Ga_{5.5}Ta_{0.5}O_{14}$) (direct piezoelectric) 1112 deg. F.
- Tourmaline (direct piezoelectric/pyroelectric) 1112 deg. F.

TCU

PCB PIEZOTRONICS INC

Comparative Sensitivities of Piezoelectric and Ceramic Materials

- PZT (ferroelectric ceramic): 250 pC/N
- Quartz (direct piezoelectric) (SiO_2) 2.3 pC/N
- Bismuth Titanate (ferroelectric ceramic) ($Bi_4Ti_3O_{12}$) 20 pC/N
- Gallium Orthophosphate (direct piezoelectric) ($GaPO_4$) 4.5 pC/N
- LGT Langatate (lanthanum gallium tantalate) ($La_3Ga_{5.5}Ta_{0.5}O_{14}$ LGT)(direct piezoelectric) 6.5 pC/N
- Tourmaline (direct piezoelectric/pyroelectric) 1.8 pC/N

TCU

PCB PIEZOTRONICS INC

Ferroelectric Ceramics

1503M11
4 – 20 mamp
proportional to
pressure

Ceramics are typically used when higher sensitivities are required and low frequency response is a secondary considerations.

First: The Fundamentals

Pressure Transducer Models and Signal Conditioning

TCU

PCB PIEZOTRONICS INC.

Second-order Low-pass System Transducer Model

Pressure transducers are typically modeled as second-order low-pass systems.

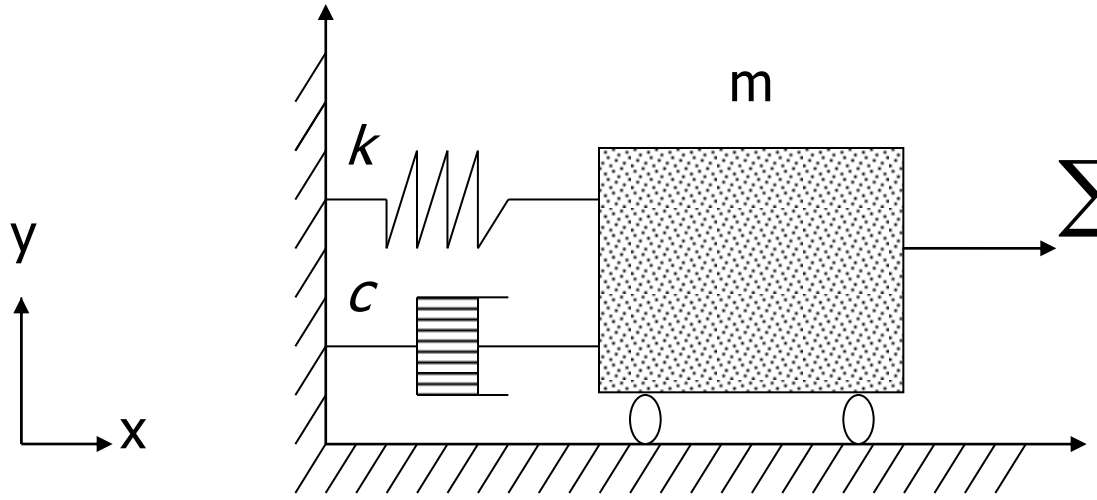

$$\sum F_x = -kx - c\dot{x} - m\ddot{x} + F = 0$$

$$m\ddot{x} + c\dot{x} + kx = F_0 e^{j\omega_{dr}t}$$

Second Order Force Model: Mechanical Analog

TCU
PCB PIEZOTRONICS INC

Pressure Transducers Generally Approximate a Second-order Low-pass Model

Model amplitude frequency response

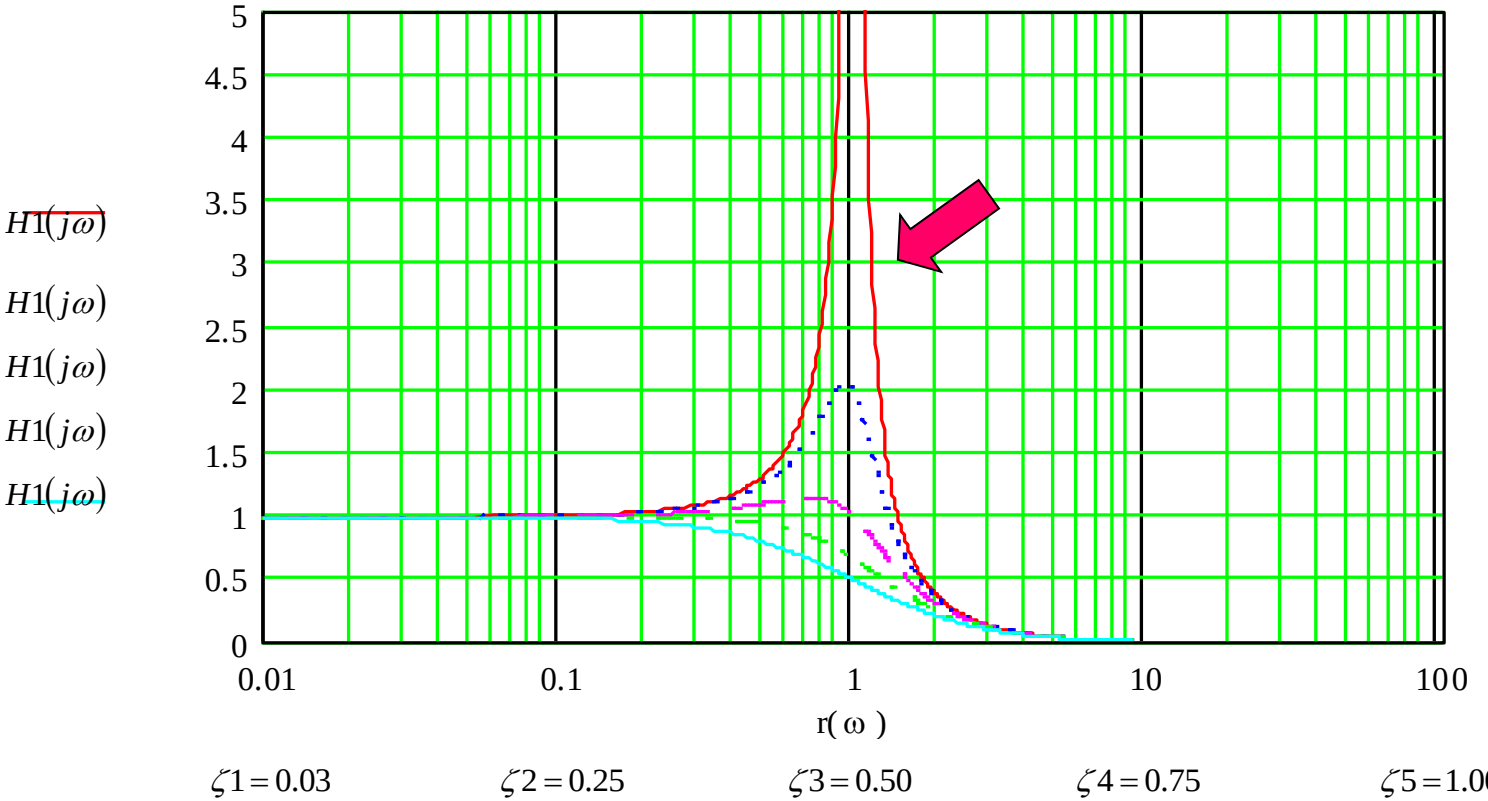

TCU
PCB PIEZOTRONICS INC

Pressure Transducers Generally Approximate a Second-order Low-pass Model

Model phase frequency response

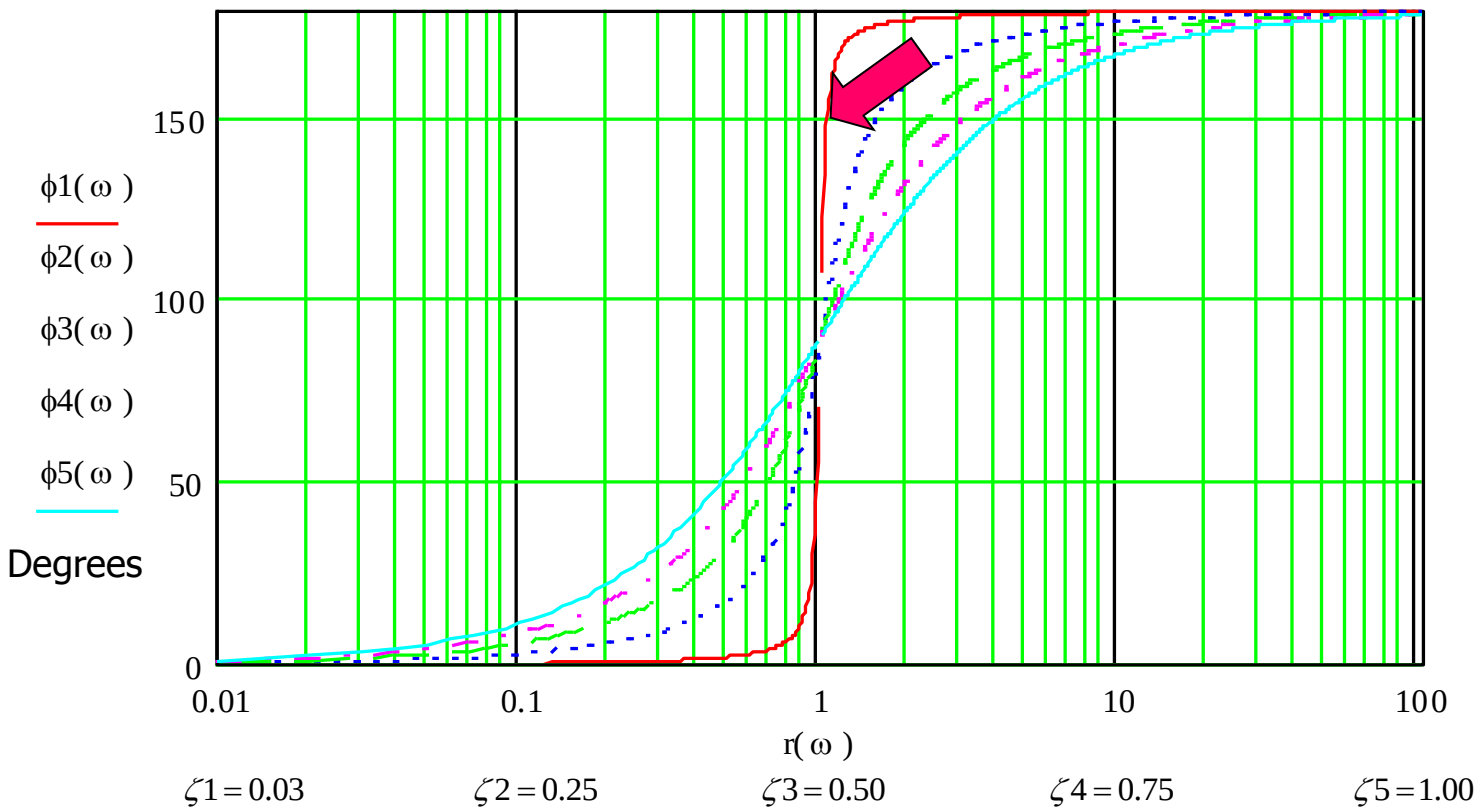

Some Limited Model Validation

Flush-diaphragm pressure transducers step response (shock tube based, 2 different transducers)

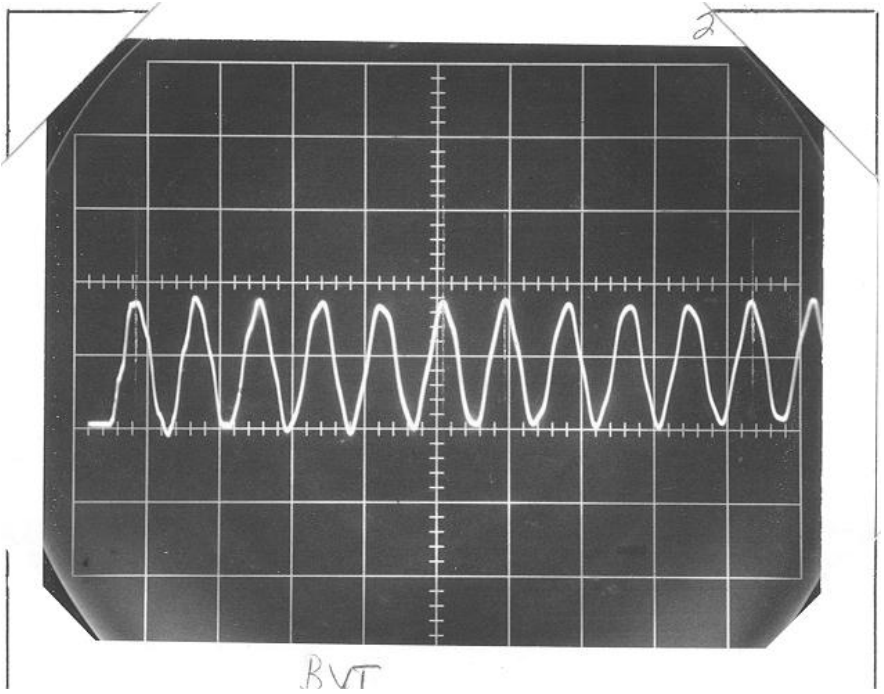

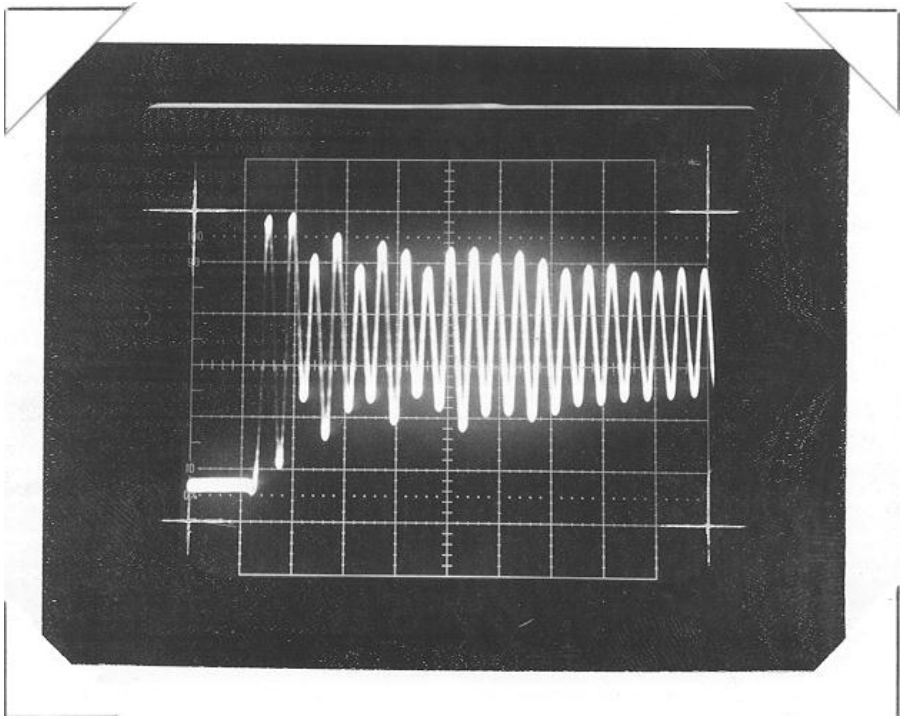

How Do These Devices Respond Electrically?

Piezoelectric (PE) circuit

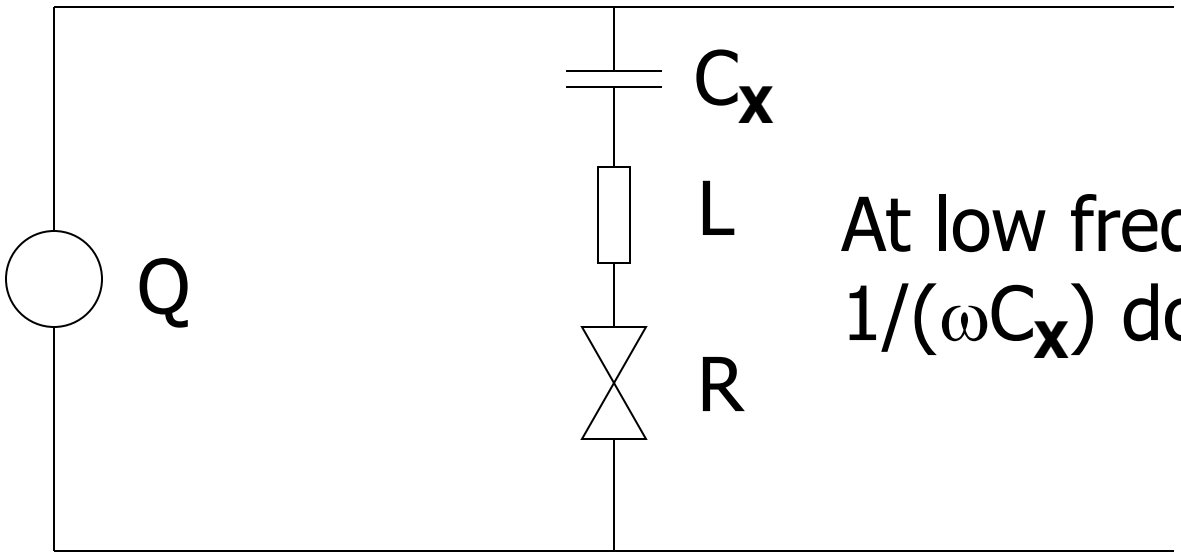

At low frequencies $1/(\omega C_x)$ dominates

Equivalent Circuits

Thevenin equivalent PE circuits

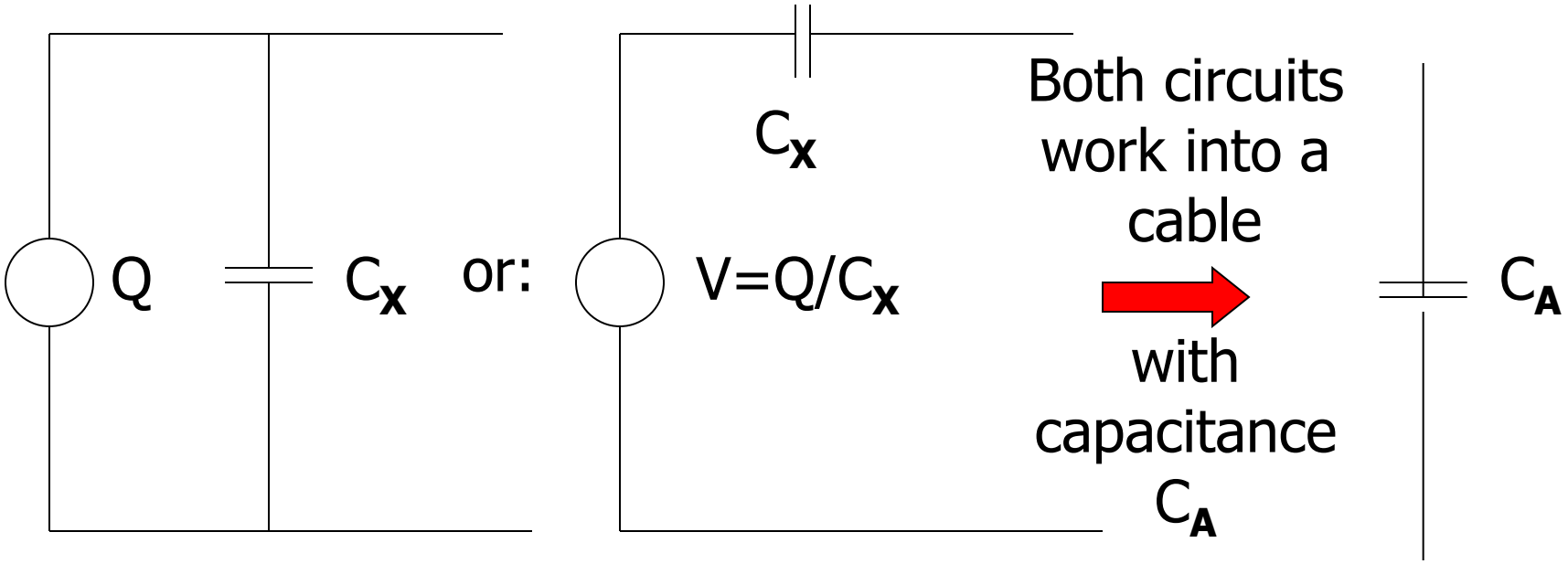

Operating Into a Load Resistance R_L

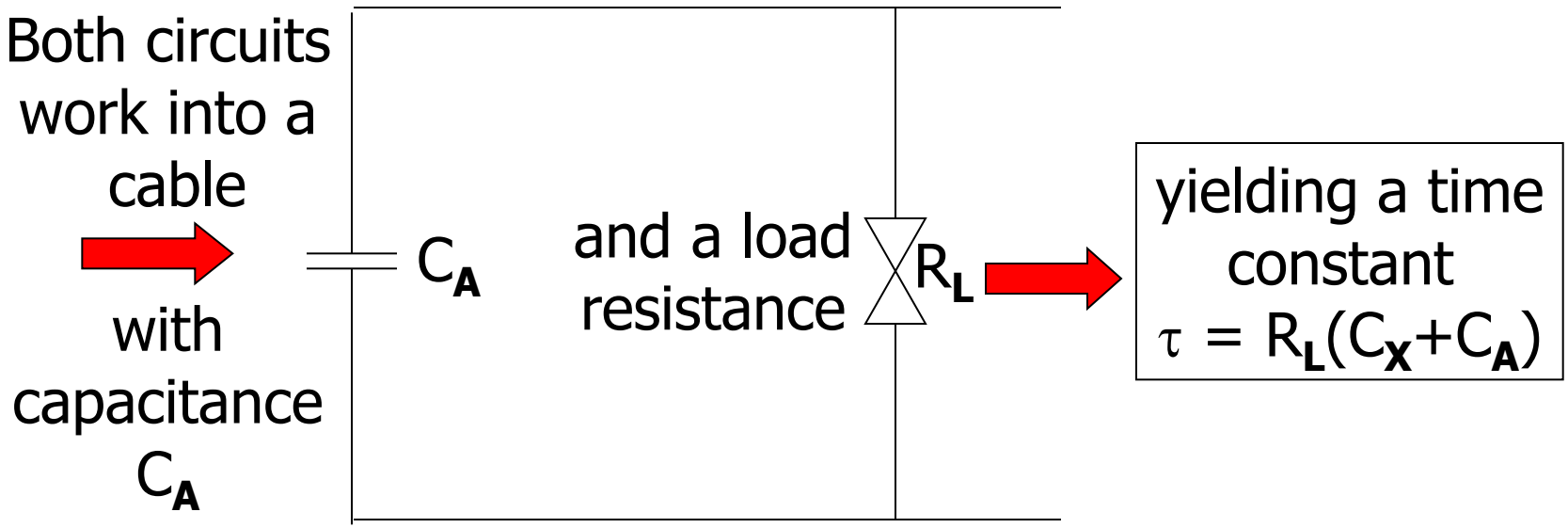

Circuit Performance as a Function of Time Constant

- Governed by time constant τ of electronics for piezoelectric transducers.
  - Sinusoidal stimulus considerations:

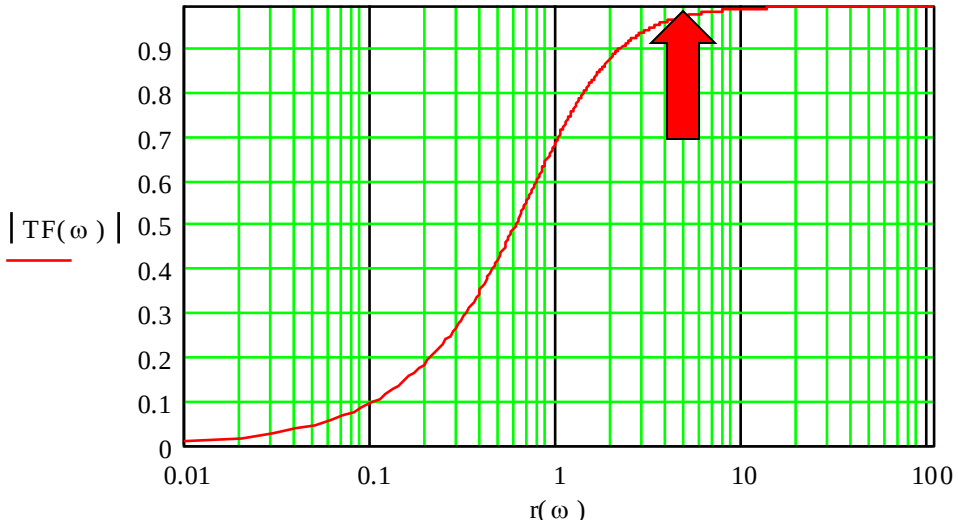

f τ =0.5 @5% attenuation

note:

r(ω) = 2Πfτ

The Time Constant Must be Compatible With the Measurement Requirement

Transient considerations:
[A time constant
(τ) ≥ 10 times the pulse width will allow less than 10% droop at the end of a square wave and guarantee better performance on other pulses (shown right)].

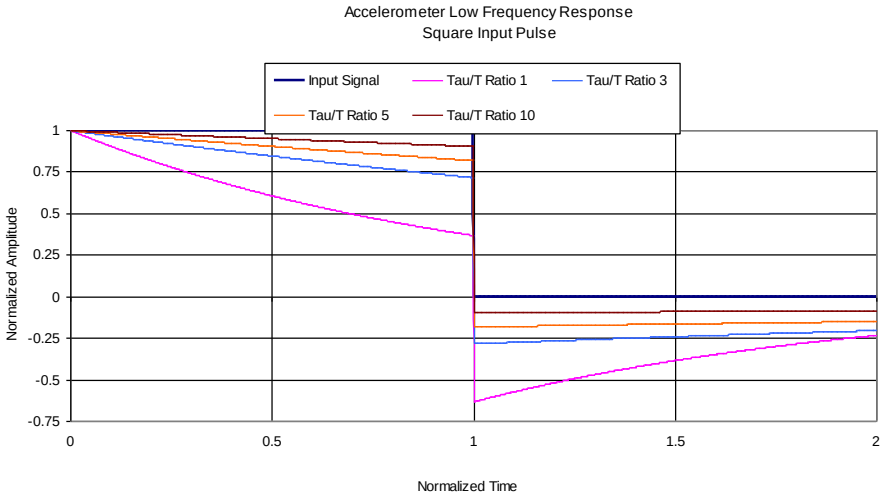

LMCO Space Systems crush test (9/07)

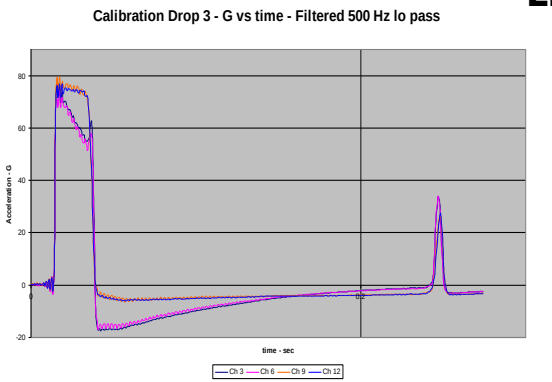

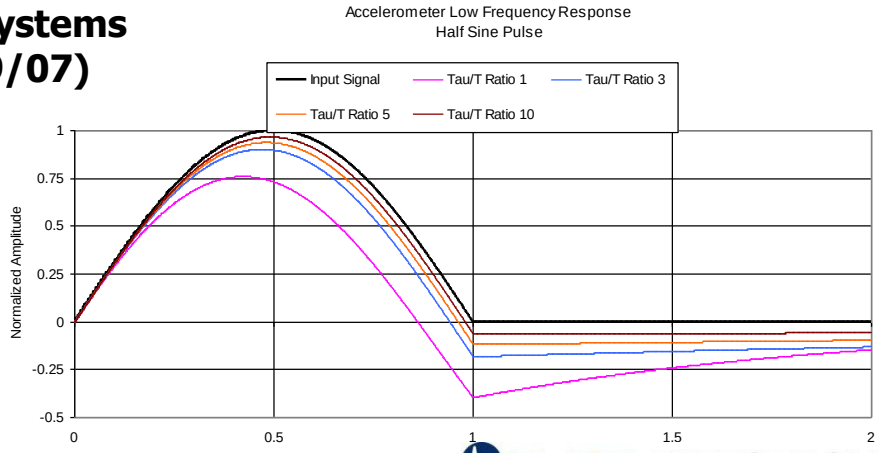

How Do We Create an Adequate Time Constant?

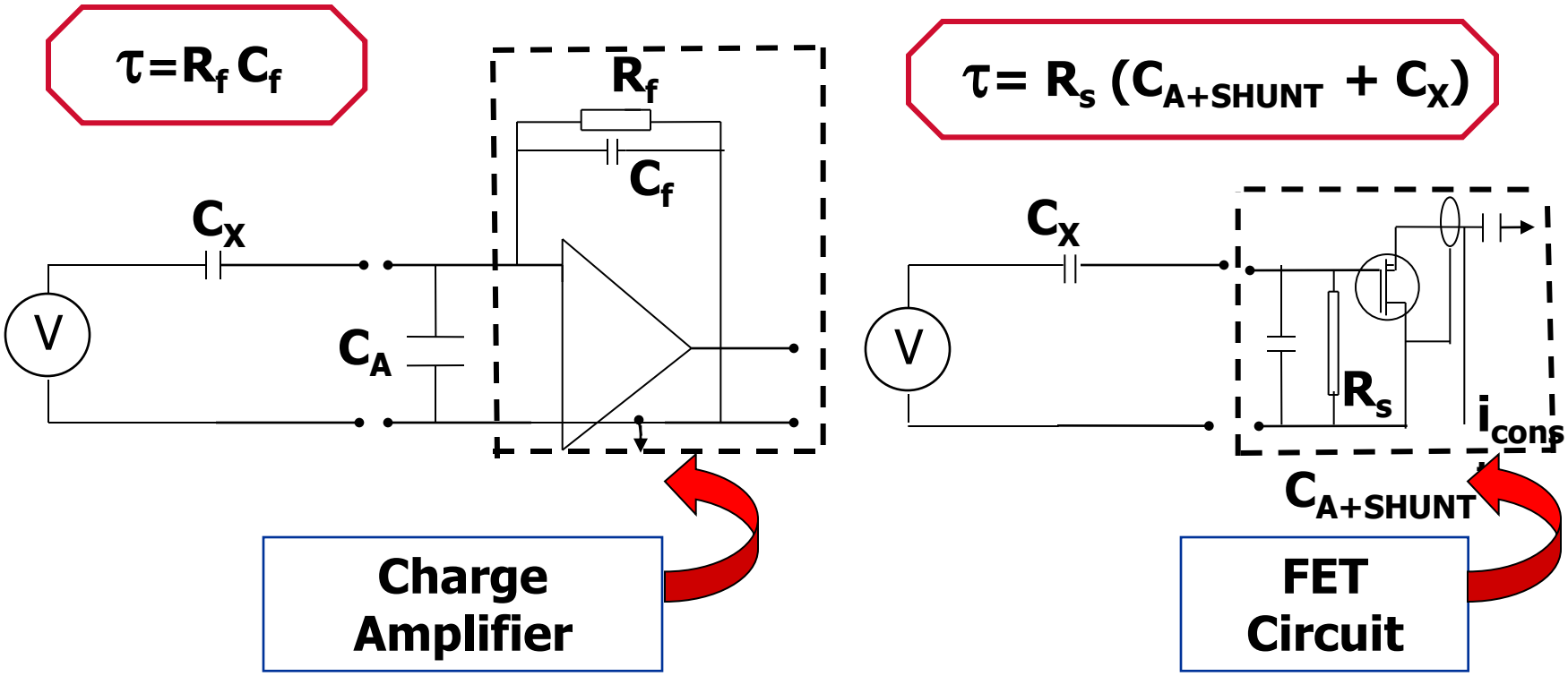

Charge Amplifier Frequency Response

Note low frequency roll-off

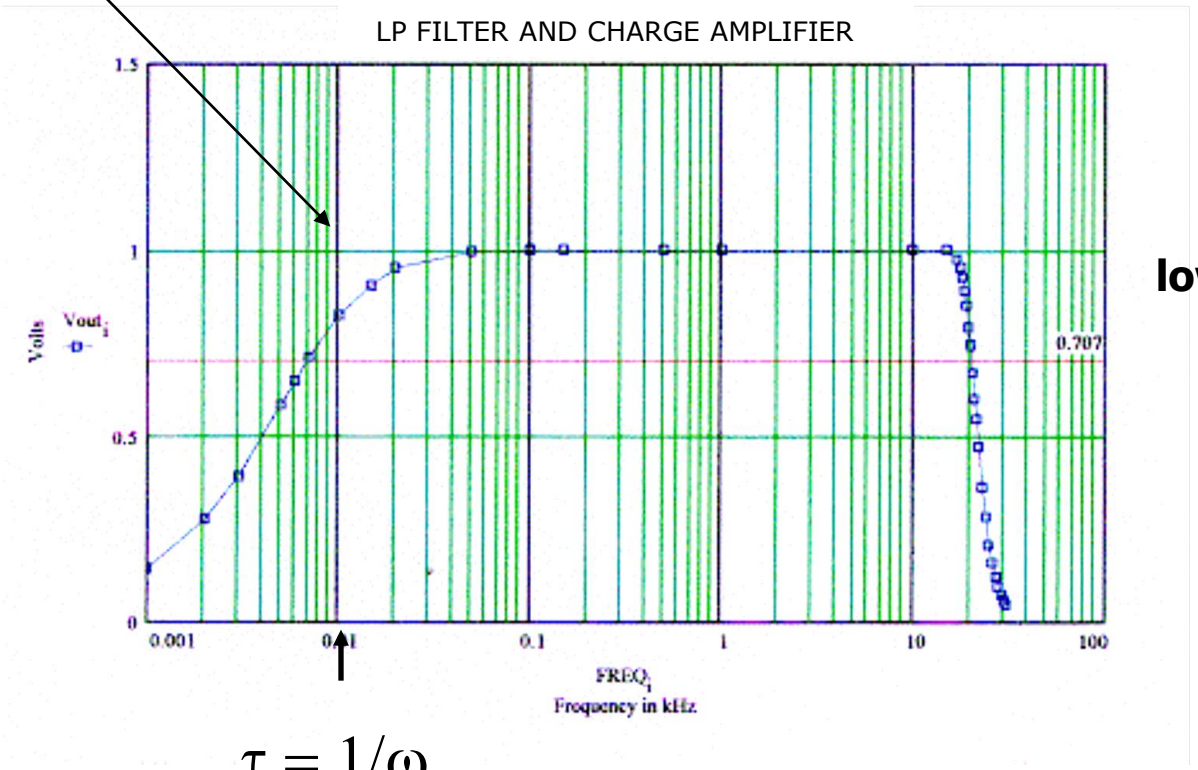

low pass filter

$$\tau = 1/\omega_c$$

Quartz Pressure Transducer with ICP® Signal Conditioning

- Piezoelectric (ICP®):

Model 113

One example:

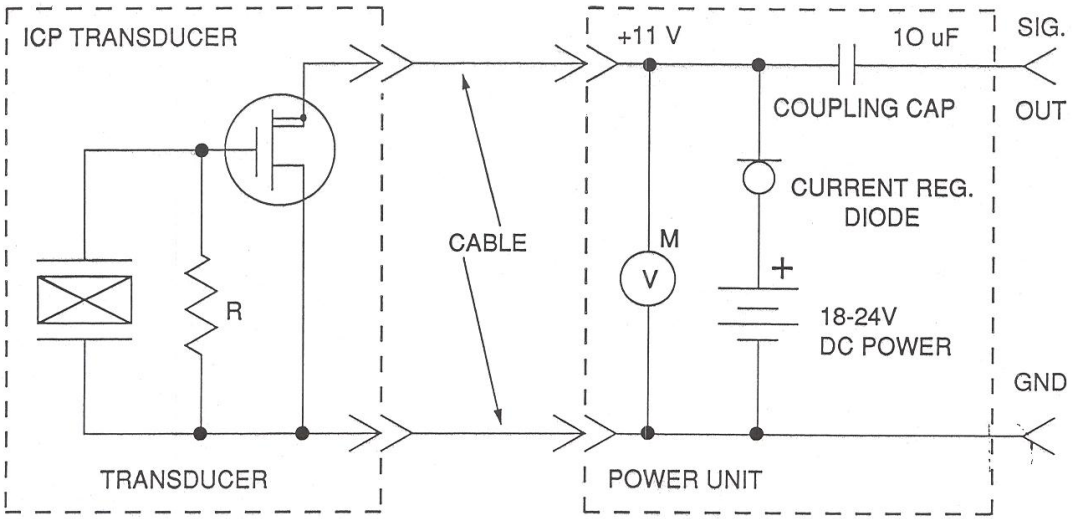

τ adjustment

First the Fundamentals

Cable Influences

TCU
PCB PIEZOTRONICS INC.

Cables

- Cables
  - coaxial (typically for piezoelectric)
    - cable capacitance is always the parameter of greatest concern (at very high frequencies the inductance is also a consideration)

Cables (Piezoelectric concern #1):

- Triboelectric effects

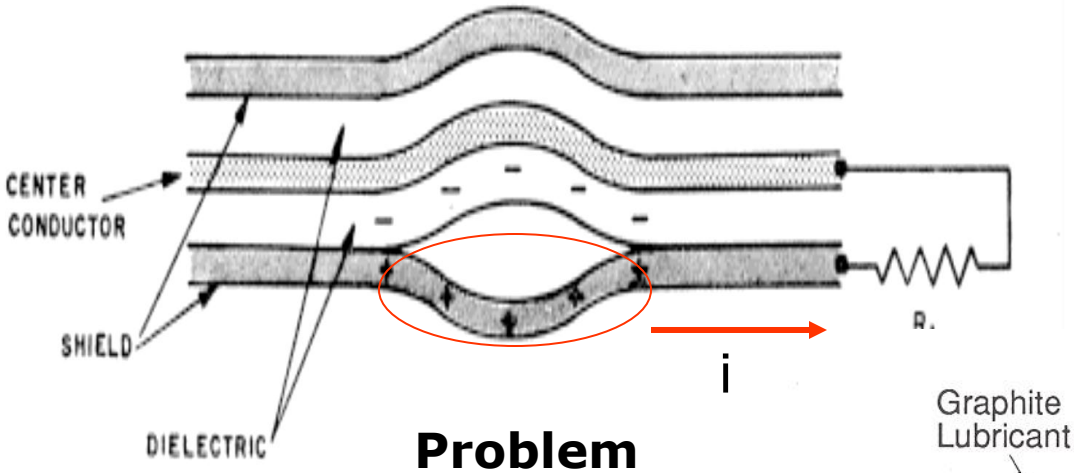

Problem

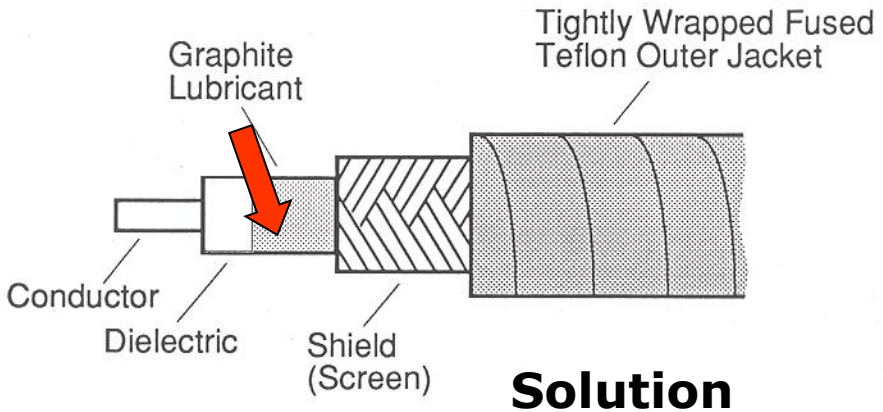

Solution

Cables (Piezoelectric concern #2):

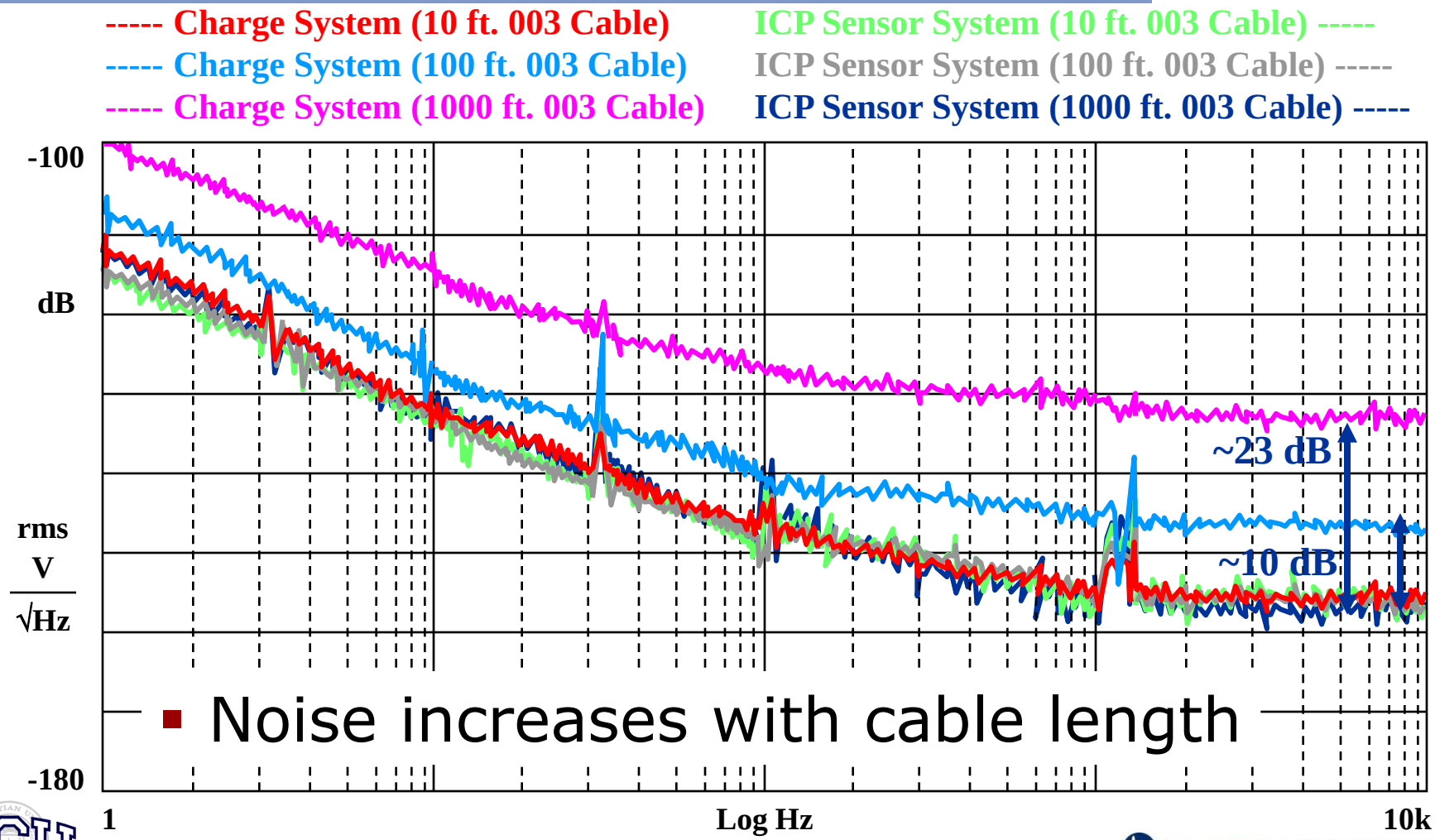

- Noise increases with cable length

(ICP®) Cable Effects

- Long Cable Considerations

$f_{max} = 10^9/[2\pi CV/(Ic-1)]$

where, f_{max} = maximum frequency (Hertz)

C = cable capacitance (picofarads)

V = maximum peak output from sensor (volts)

Ic = constant current from signal conditioner (mA)

10^9 = scaling factor to equate units

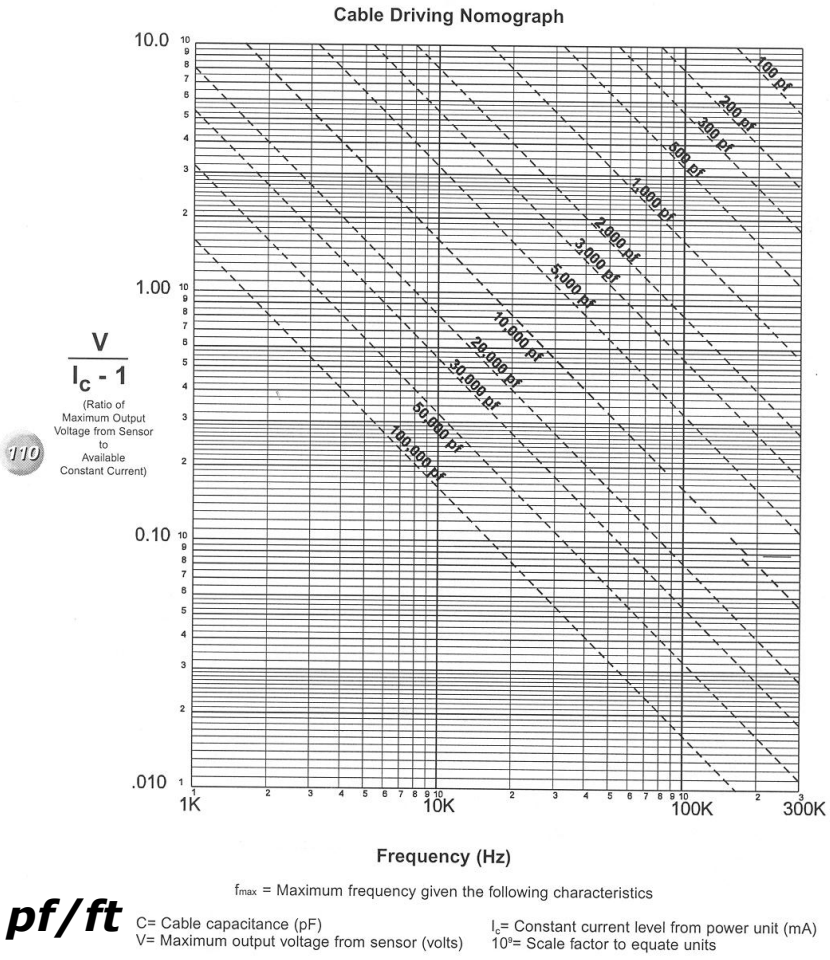

Note: RG 58 = 30 pf/ft, RG 62 = 15 pf/ft

Note: Cable Reflections Should also be Considered

- Long cables reflect high frequencies

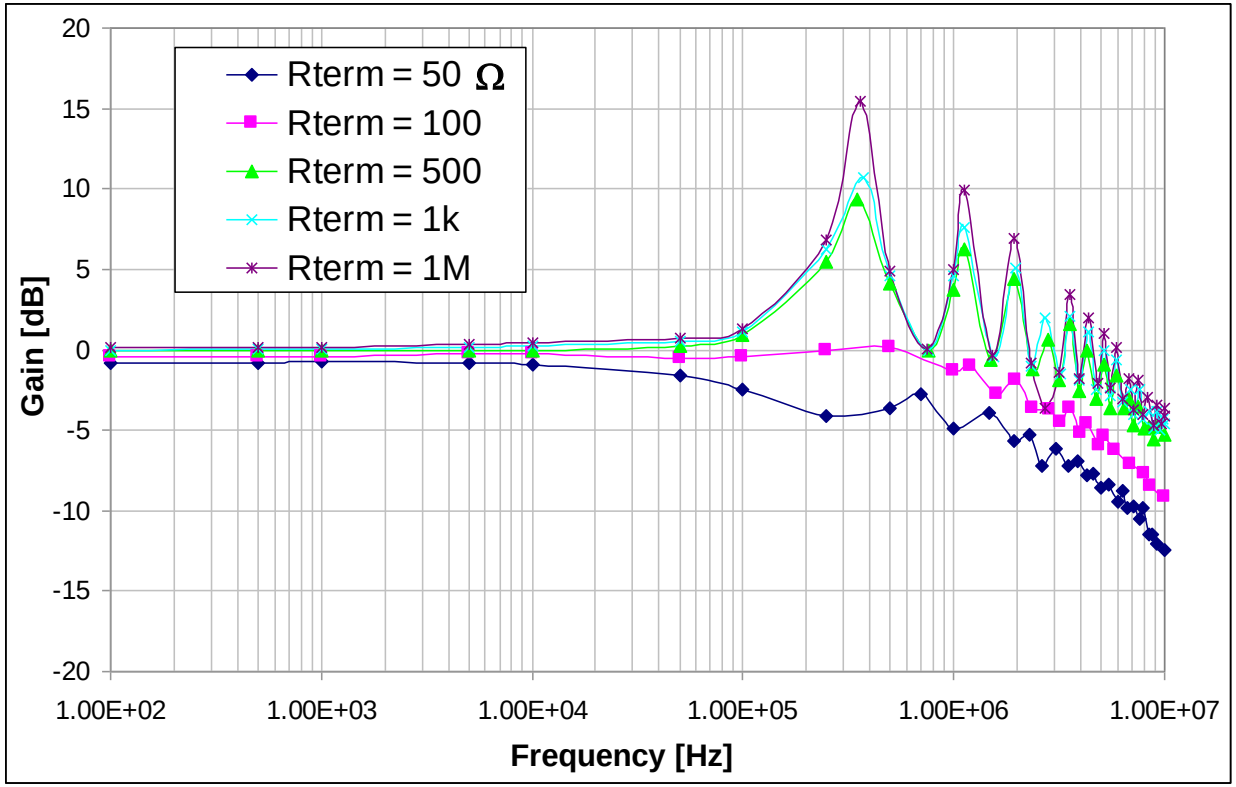

Cable Application Notes

- When attaching coaxial cable to a transducer, turn the connector nut onto the transducer (not the opposite) to avoid pin damage.
- Be sure cable connector is tightly screwed to specifications.
- Tie the cable down within 2-3” of the transducer to provide strain relief.
- In a high humidity environment, curl the cable in a drip loop.

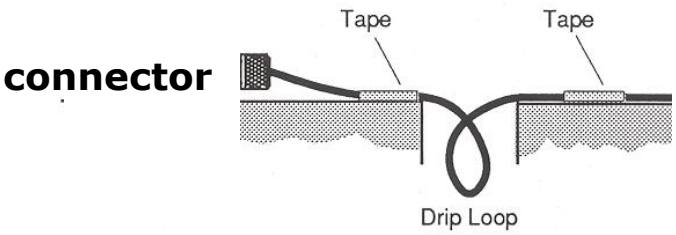

Cable Application Notes

- Clean connectors to avoid a low impedance path to signal-ground (specifically PE).
- Don’t coil extra cable.
- Separate the power and signal cable runs.
- Select cable material compatible with the environment.
- Treat the cable as carefully as the transducer.

Brief Summary

- We have looked at the physical environments.
- We have looked at the applicable transducer technologies.
- We have looked at pressure transducer dynamic models.
- We have looked at pressure transducer signal conditioning.
- We have looked at some influences of the cable.

Dynamic Pressure Measurements

Air Blast Measurements

TCU

PCB PIEZOTRONICS INC.

How Do We Measure Static Overpressure?

- Above ground surface:
  - pencil probe (PCB 137) ----------

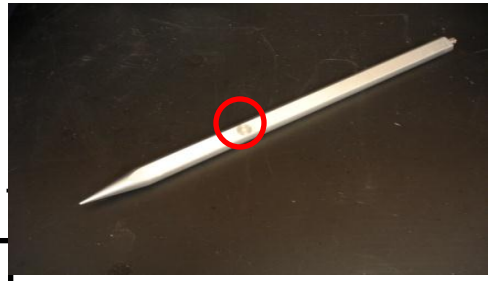

  - lollypop gage ----------(difficult to align)

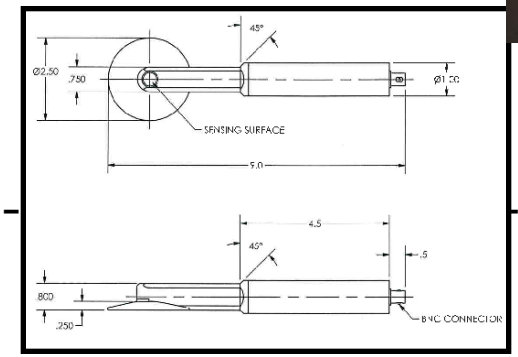

- At ground surface
  - flush mounted sensor----------

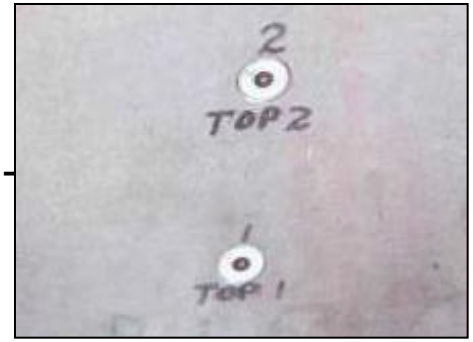

Ideal Pressure-time Response to an Explosion in a Still, Homogeneous Atmosphere

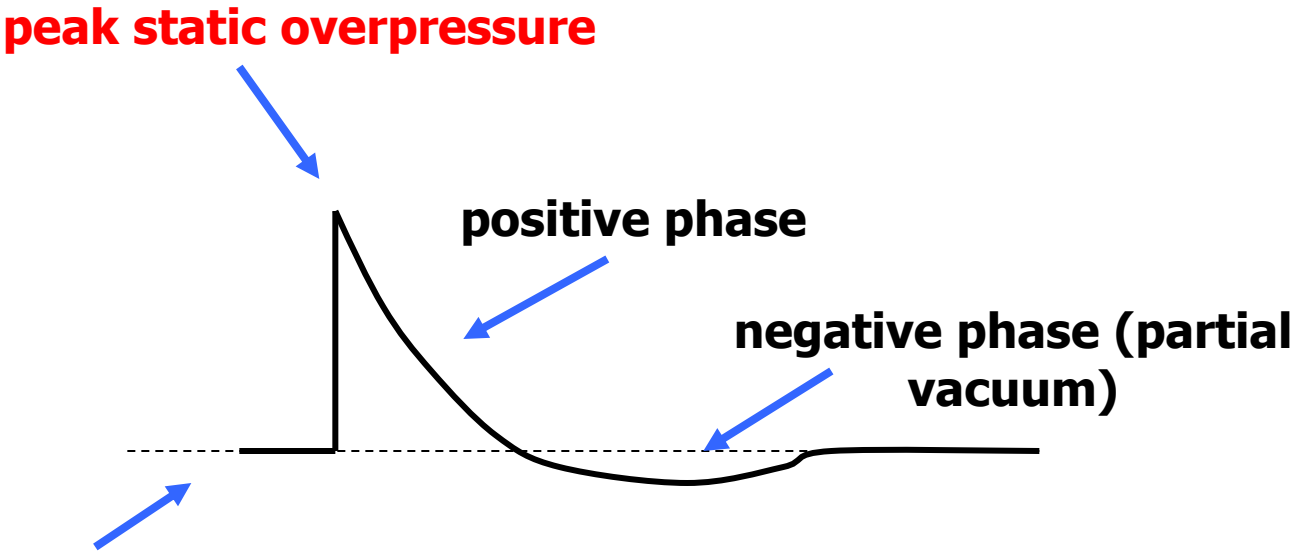

Net (positive + negative areas) = total impulse

$$I = \int (p(t))dt$$

Structures respond to impulse

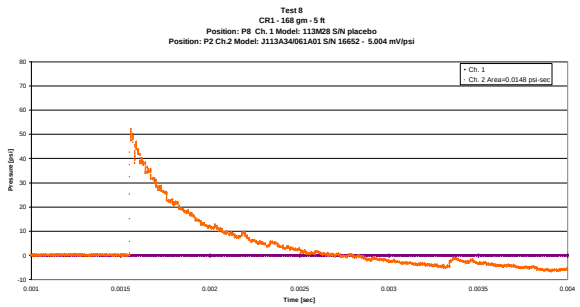

Actual Test Data Recorded Appropriately

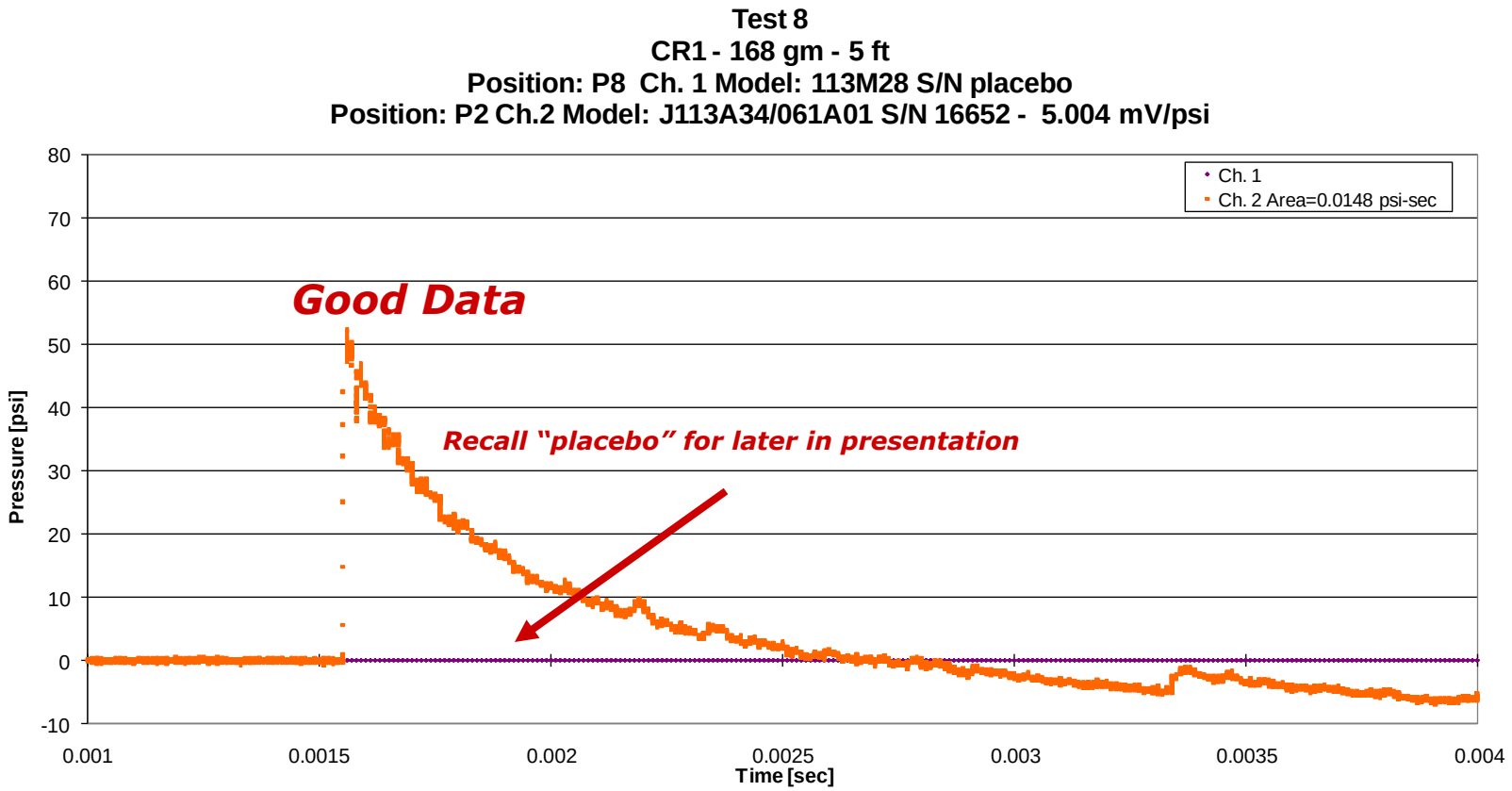

Deviations From Ideal Responses Occur

- Causes:
  - reflections at contact surface between explosion products and air
  - low specific energy source may result in long travel distances before "shock up" occurs
  - *caged* explosives may result in fragments that temporarily outrun the blast wave
  - ground effects (dust, heat reflecting surfaces)
  - reflections from solid object or diffraction around it

Free Air Burst Surface Reflection

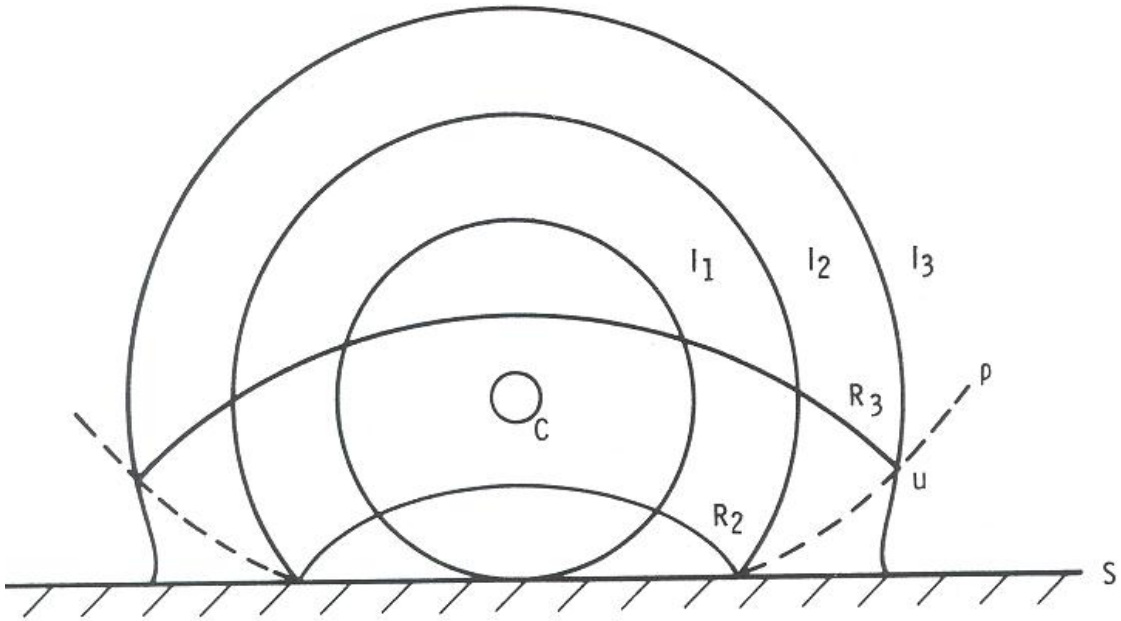

mach stem eventually swollows up 2-shock system

reflection coefficient can vary from 0-12

no reflections if surface burst: plane wave approximation applies to remote structures

If you can try to be out in the mach stem where the HE appears as a point source and things make sense.

Flush Surface Ground Probe

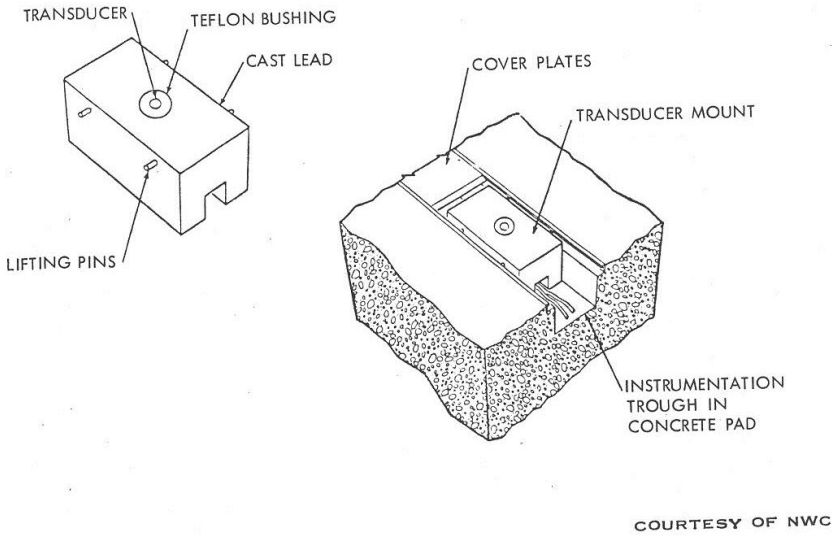

Static overpressure at ground surface is strongly influenced by surface conditions, reflected air shocks, and ground induced air shock, particularly in close-in regions. *Preferable to measure static overpressure above the surface of the ground at various radii, elevation, and azimuth angles to more fully characterize the pressure profile and symmetry of the air blast.*

Pencil Probe for Static Overpressure Air Blast Measurements

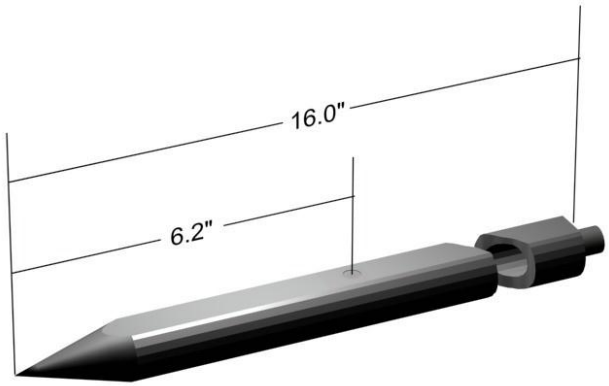

Series 137 Pencil Probe

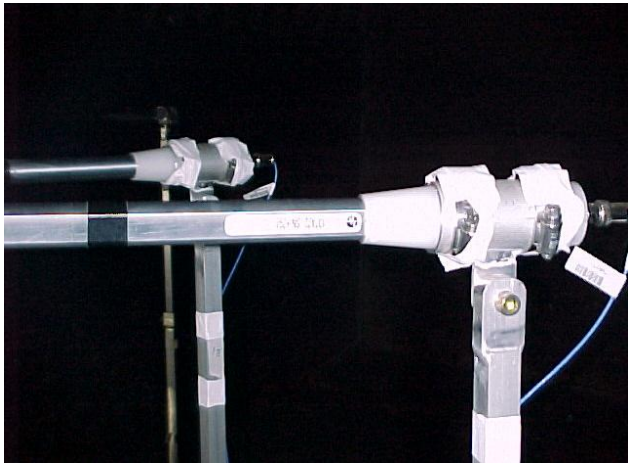

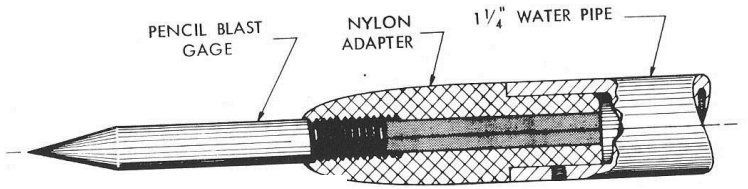

TYPICAL FIELD BLAST INSTALLATION:

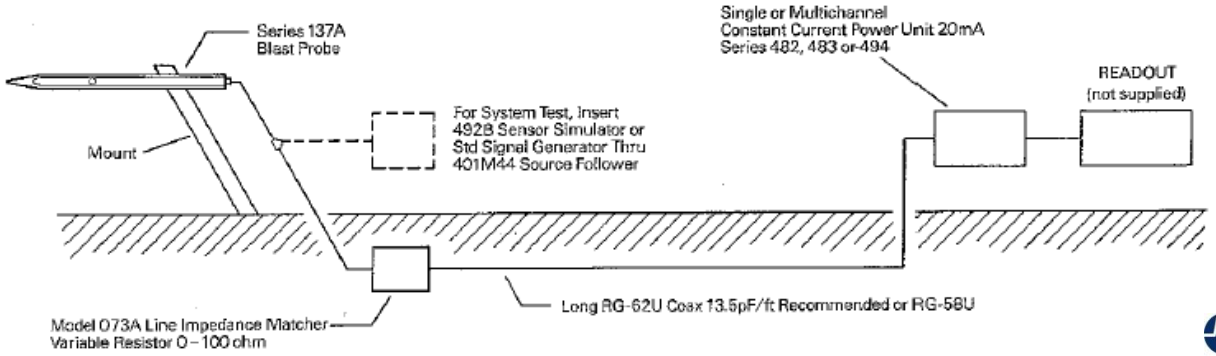

TCU

PCB PIEZOTRONICS INC

Pencil Probe for Side on Air Blast Measurements

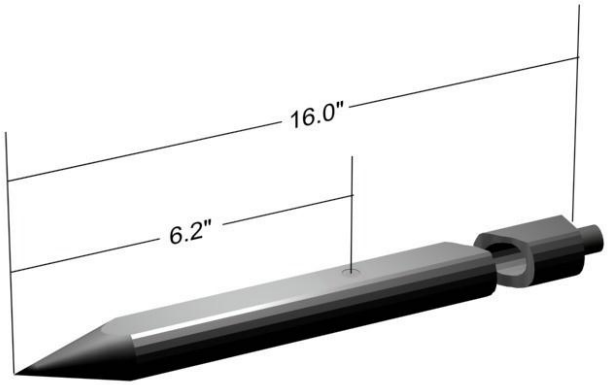

Series 137 Pencil Probe

$\lambda f = c$

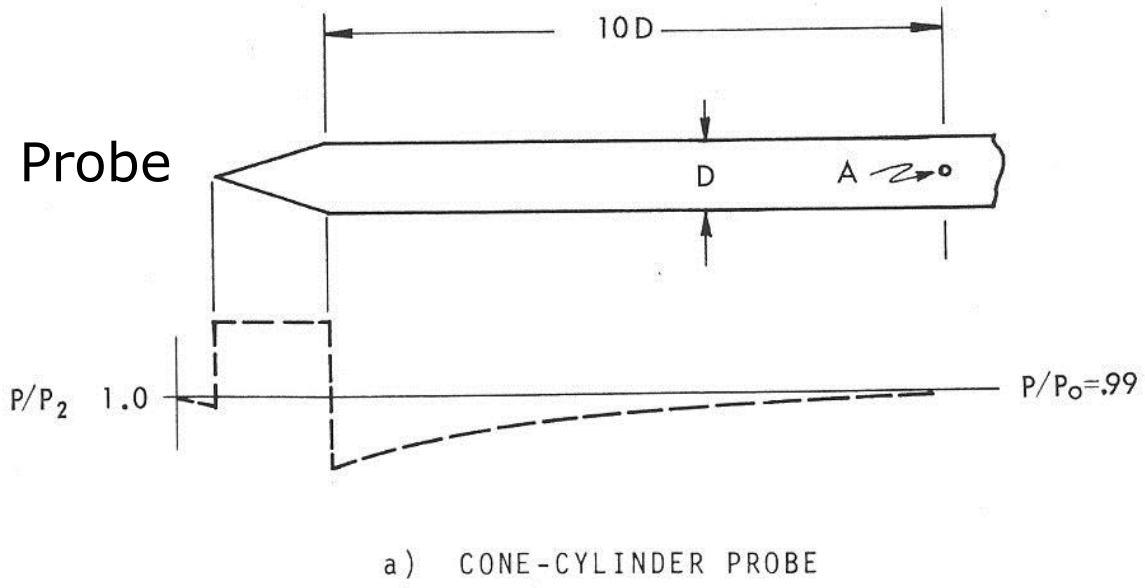

a) CONE-CYLINDER PROBE

There are many challenges!

- Accurate measurement of the static overpressure in an air blast is extremely challenging.
  - Pressure rise times can be sub-microsecond, imparting extremely high-frequency response demands on the measuring transducers and their associated signal conditioning.
  - Concurrent transient temperatures exist in the 1000's of degrees F or C.
  - Other environments, e.g., ground shocks and their associated strain waves, intense light, fragment impact, ionized gases, and other undesired environments, all attempt to couple into the transducer and its mount, the instrumentation cabling, and other measurement system components.

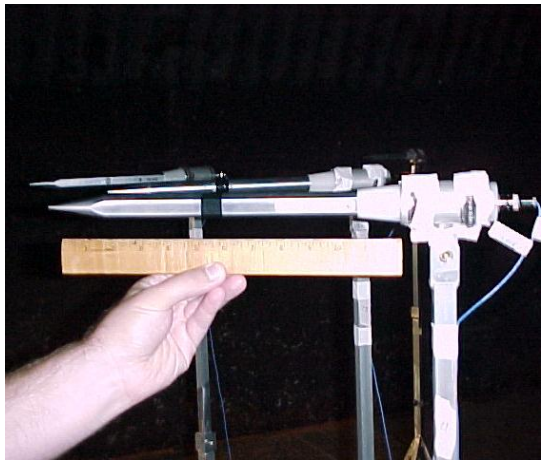

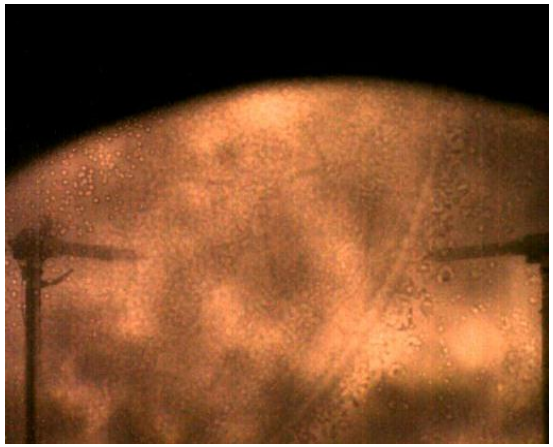

Transducer Alignment

Pencil probe (align to incident shock within ~ +/- 5 degrees):

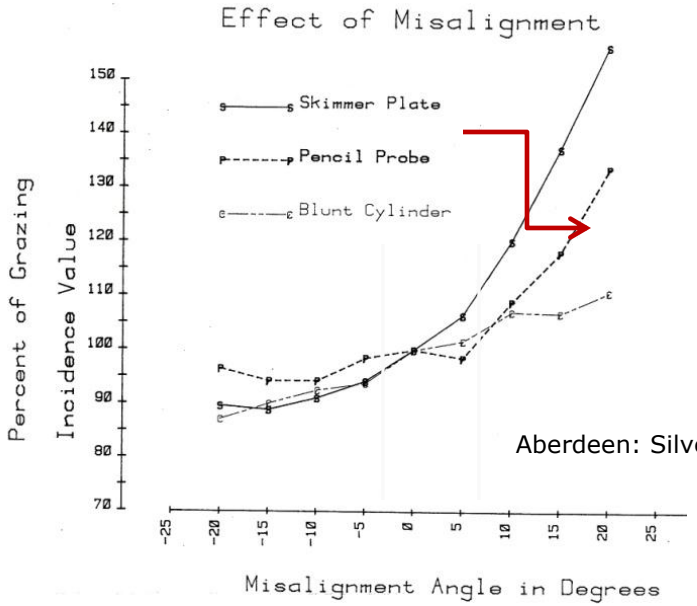

Aberdeen: Silver/Walton

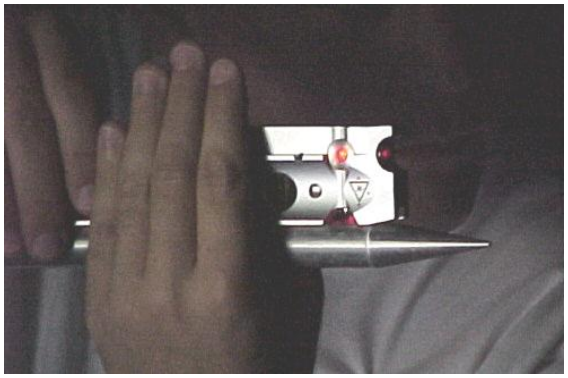

Ground mount transducer must be flush mounted:

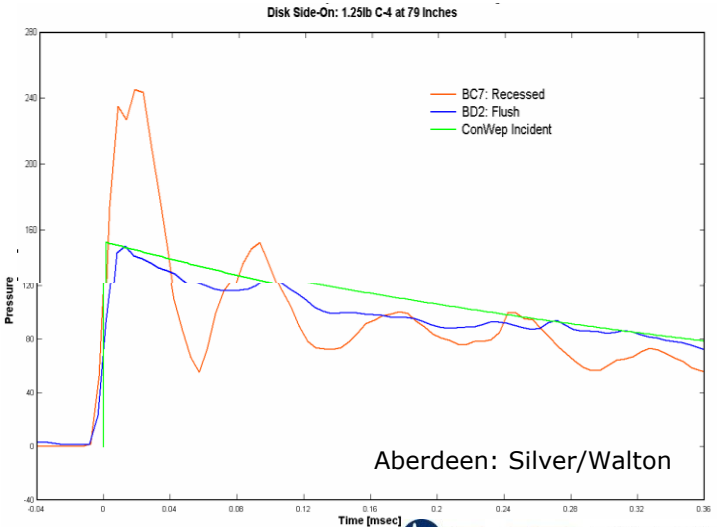

Aberdeen: Silver/Walton

Comparative Advantages

- Pencil probe:
  - Not dependent on smooth ground surface.
  - Not as affected by dust or thermal gradients close to ground.
- Ground transducer:
  - Pointing is not an issue.
  - Encounters mach stem before pencil probe at close in location.

Thermal protection must be provided.

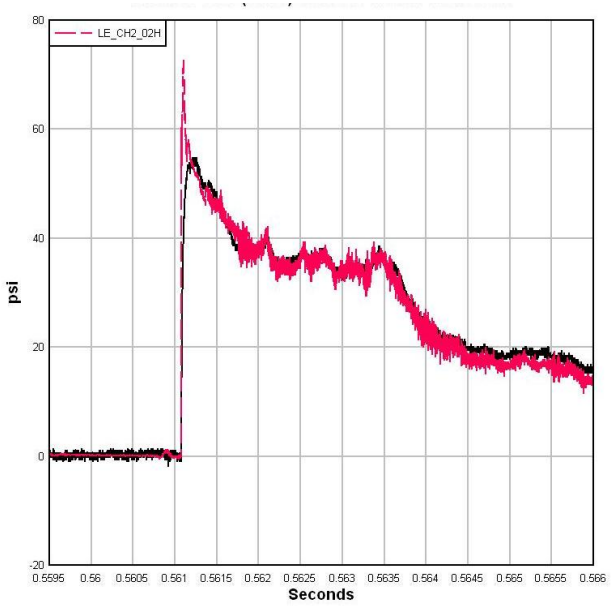

Quartz (red) and MEMS (black) ground mounts agreeing

Thermal analysis at TCU (Bittle/Walter) has shown that exposure of a pressure transducer's diaphragm to 3500 deg F for 10-20 msec. (typical blast exposure) results in its temperature increase of in the neighborhood of 10 deg F. Regardless, this thermal transient environment can be an error source unless delayed. A wrap of tape on the pencil probe and RTV on the face of the ground mount transducer provide this protection.

Transducer Mechanical & Electrical Isolation

Pencil probe:

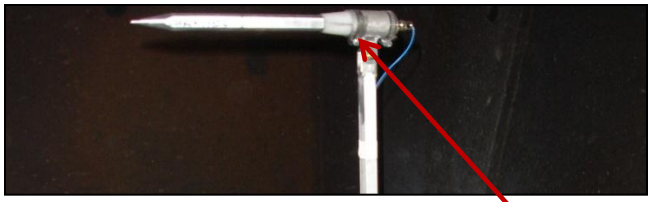

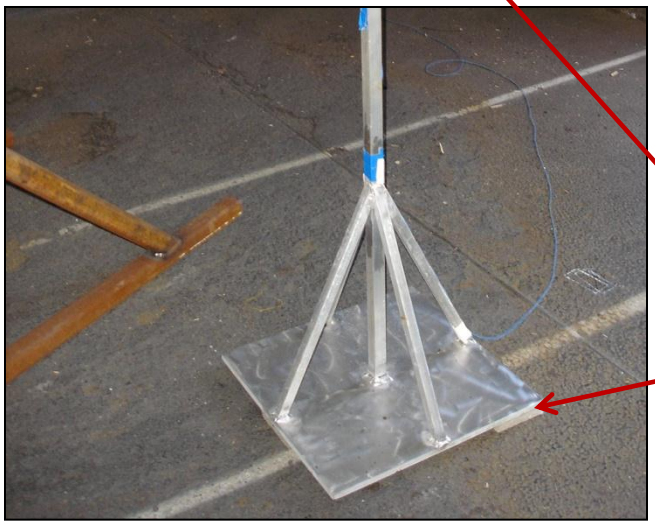

Ground mount transducer:

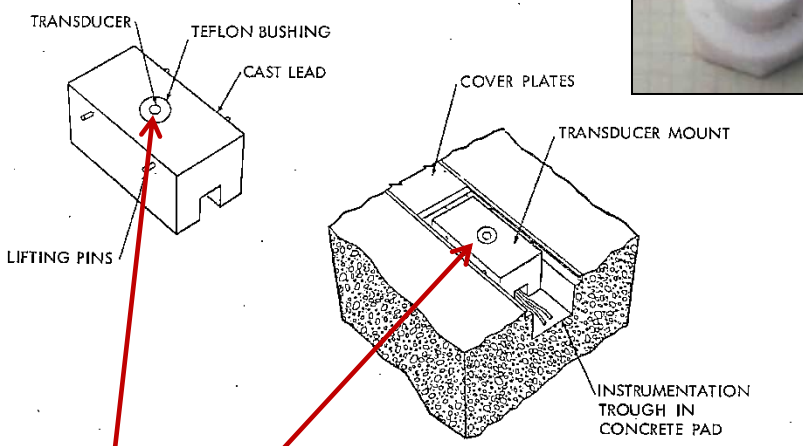

mechanical, electrical isolation

Note: All mechanical transitions to/from pencil probe and ground mount must be smooth.

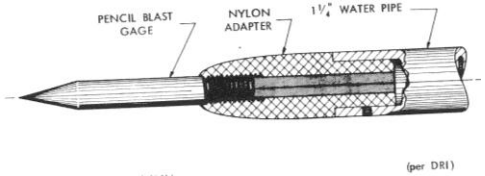

Fielding Considerations

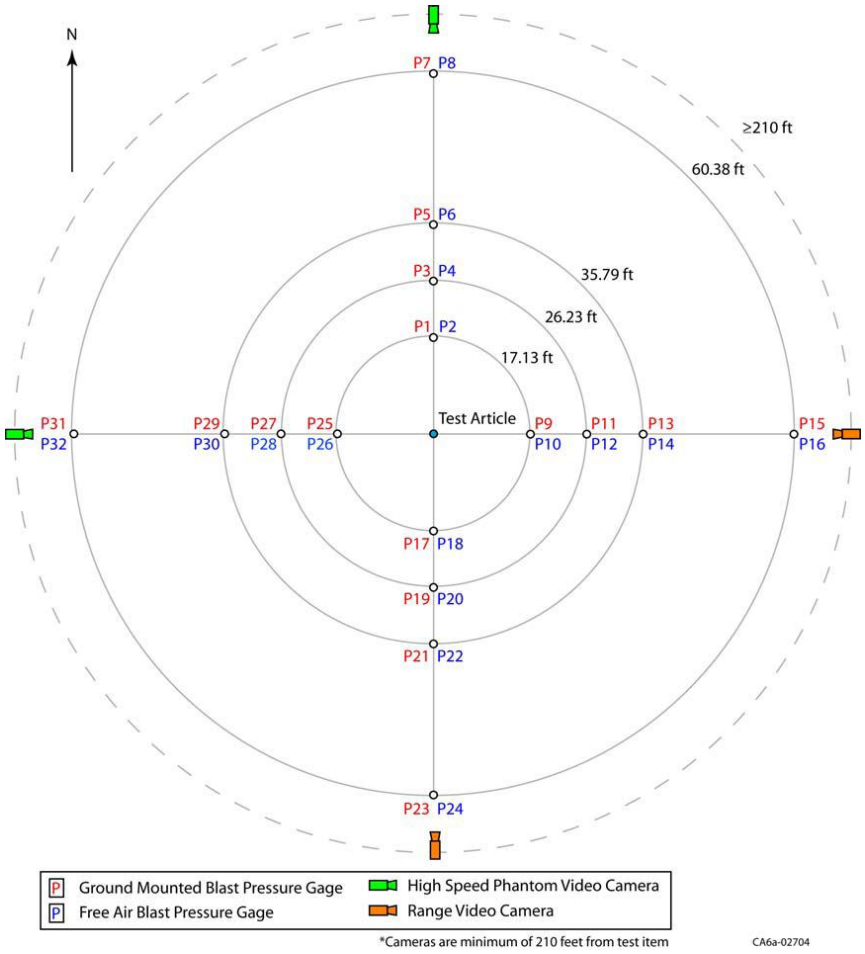

- Plan your array to gather statistics.
- Vary distances between as well as in azimuth.
- Work where the pencil probe is looking into a planar shock front.
- Better to stand back where shock front is well formed.
- Account for ground surface reflectivity in adjusting pressure to equivalent air burst.

A Pencil Probe Application

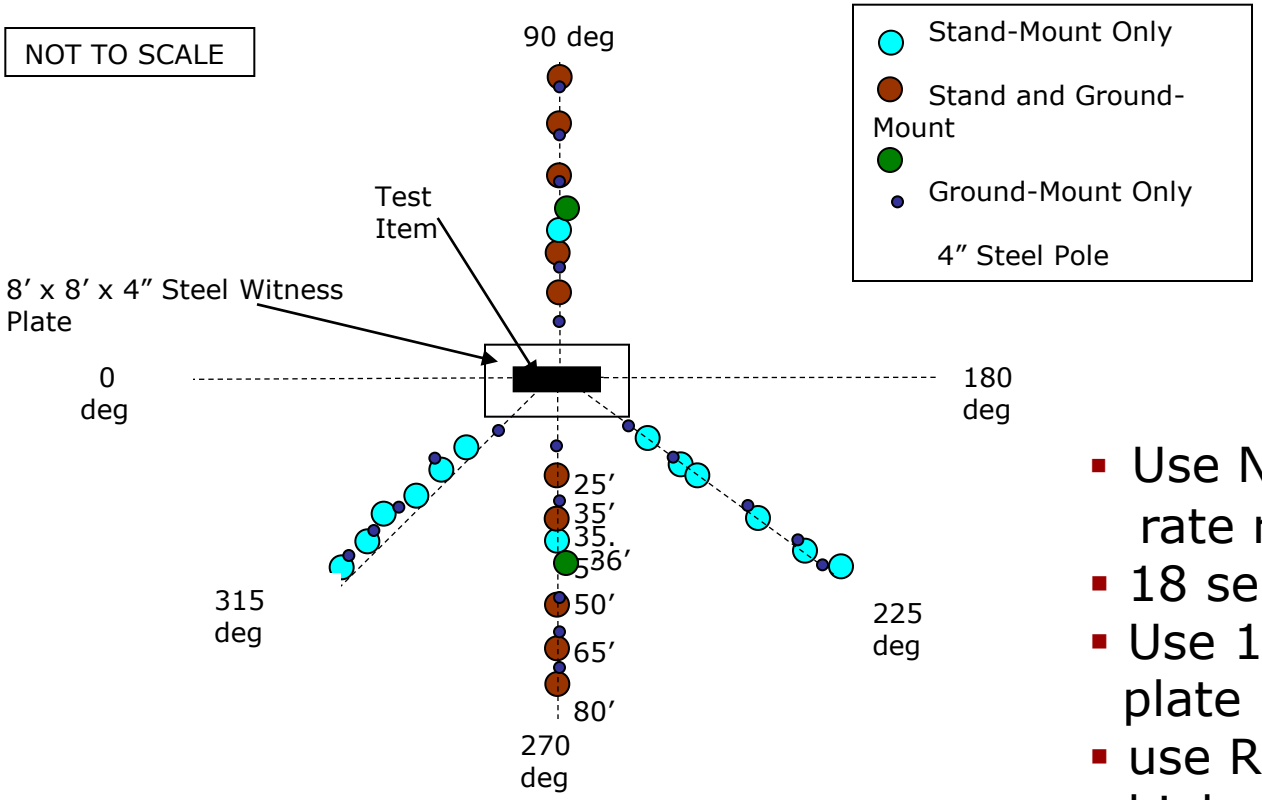

- Use Nicolet 1 MHZ sample rate recorder
- 18 sensors/test
- Use 102 model in witness plate
- use RG62-15 pF/ft
- high pass at 0.1 Hz

A Pencil Probe Application

- Test stand

- Stands mounted along radial line.
- Stand off to measure pressures of 3 to 100 psi.

- Ground transducer and pencil probe

Another Probe Application Explosive Characterization

Evaluating explosive compounds

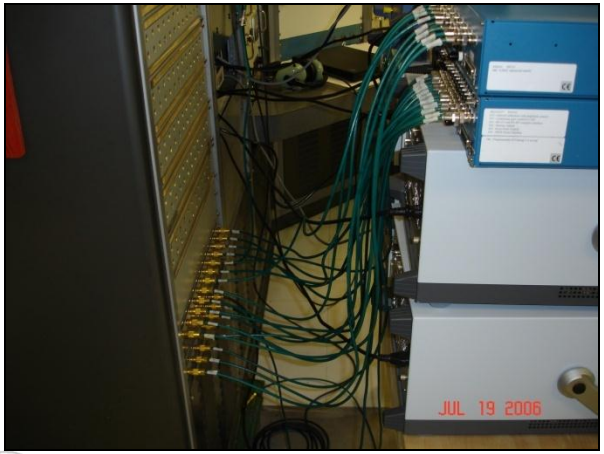

TCU

PCB PIEZOTRONICS INC

If care is used, pencil probe and ground transducer can agree.

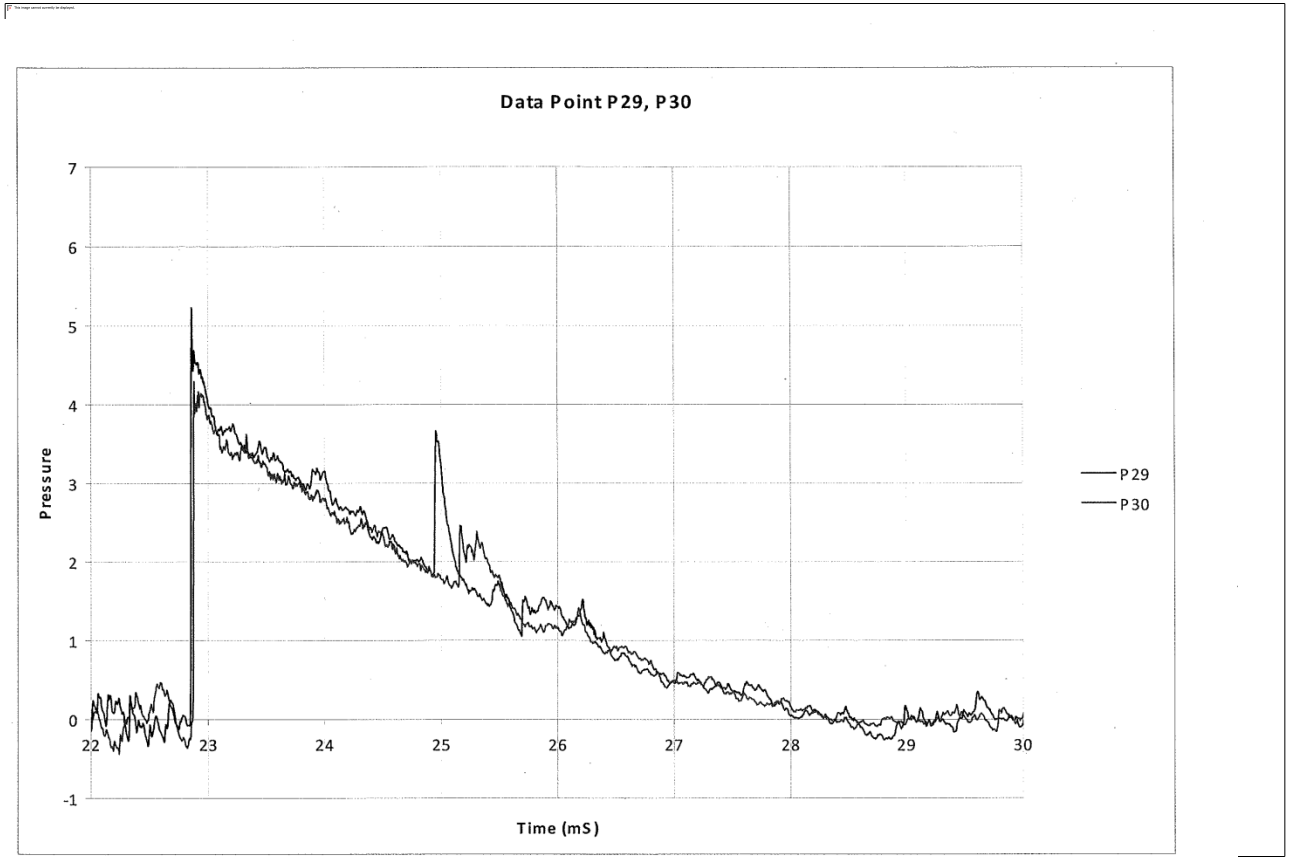

An exponential curve fit to the initial response helps accommodate transducer ringing due to "instantaneous" rise time.

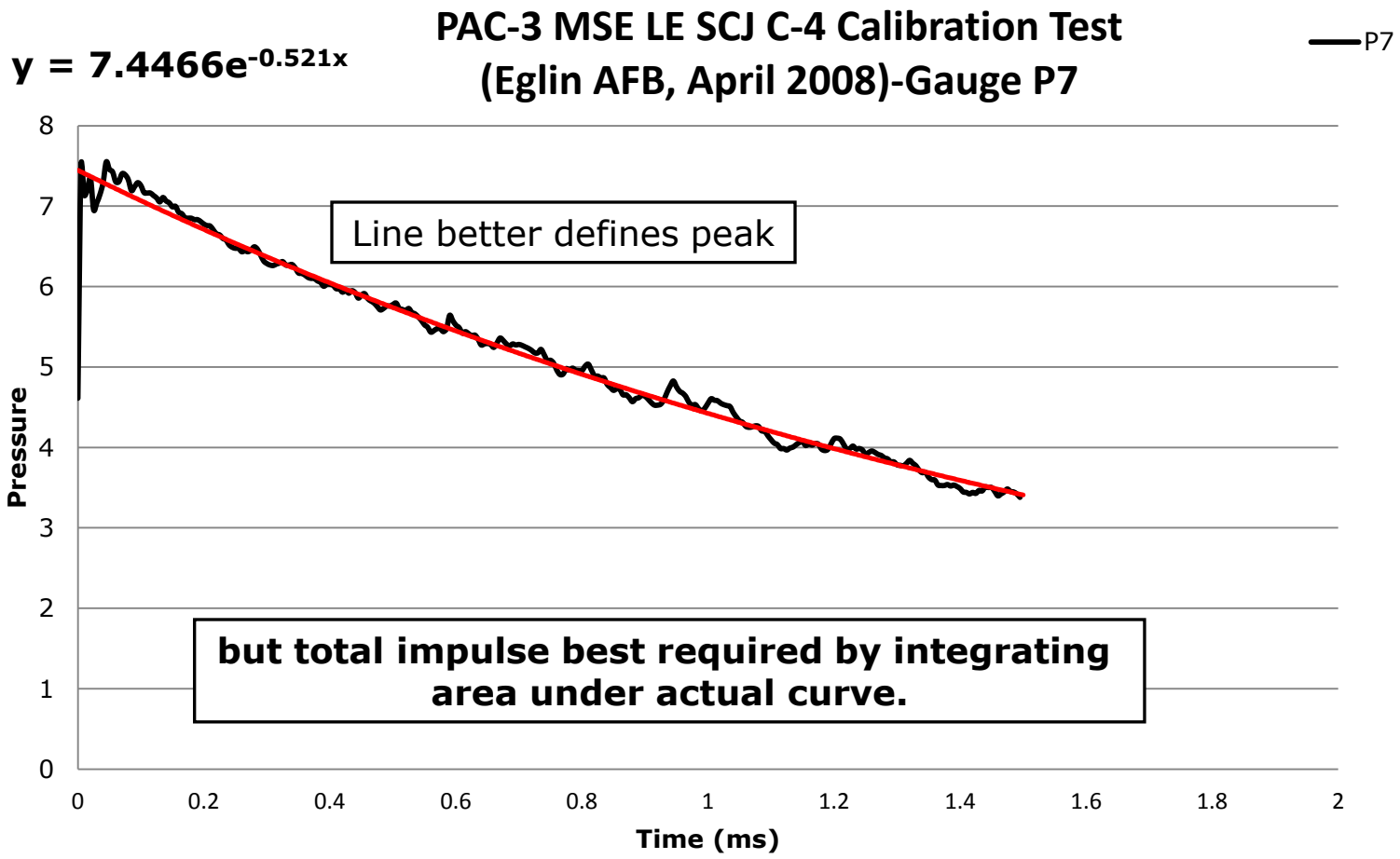

How Do We Measure Reflected Pressure?

- Reflected overpressure: pressure encountered due to a rigid surface in the path of the shock wave that is not parallel to its direction of motion. This measurement is usually associated with a target subjected to blast loading. Target response characterization with strain gages and accelerometers are typical complimentary measurements.
  - Measure with active force summing area of transducer parallel to the rigid surface.

Model 134 Provides Fastest Reflected and Peak Overpressure Rise times

Model 134 to 20,000 psi tourmaline pressure bar (1/2 – 20 thread)

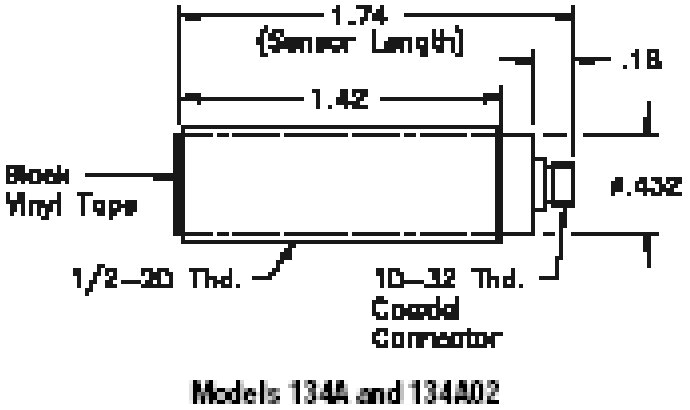

Models 134A and 134A02

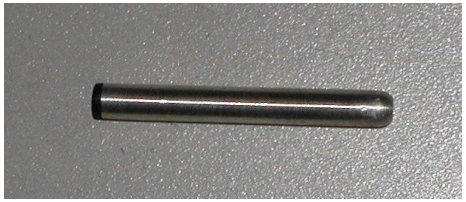

Bar: tourmaline on silver alloy

134 Tourmaline Pressure Bar
Non-Resonant
0.2 μ Sec rise time

TCU

PCB PIEZOTRONICS INC

Pressure Bar (PCB 134)

- Instantaneous , reflected (face-on) shock wave measurements
- Non-resonant sensor
- 0.2 microsecond rise time
- Diaphragm coated with conductive silver epoxy
- 0.125 pC/psi sensitivity
- 10k and 20k psi ranges

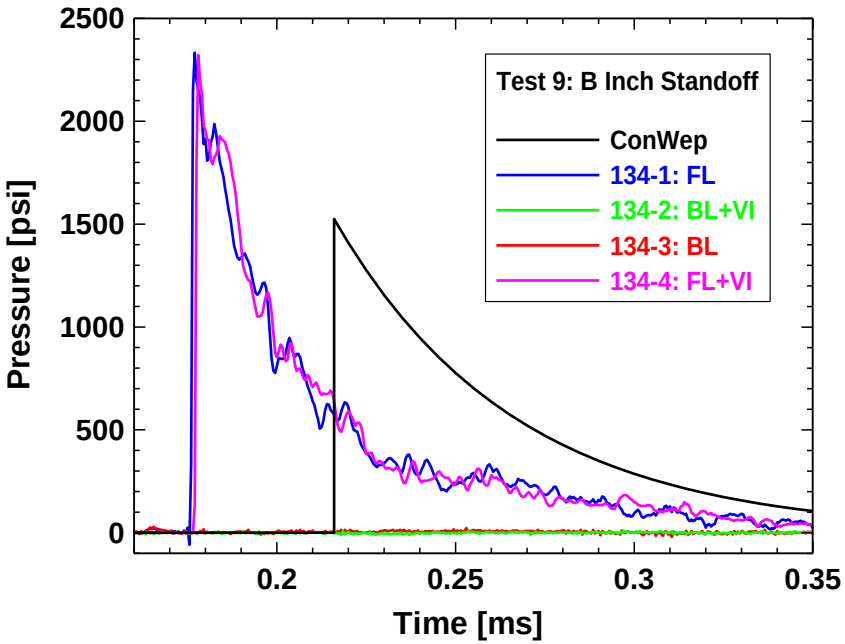

Model 113 Also Has Fast Risetimes (500 KHz Resonant Frequency)

Example: 113 in charge or ICP® mode to 15,000 psi.

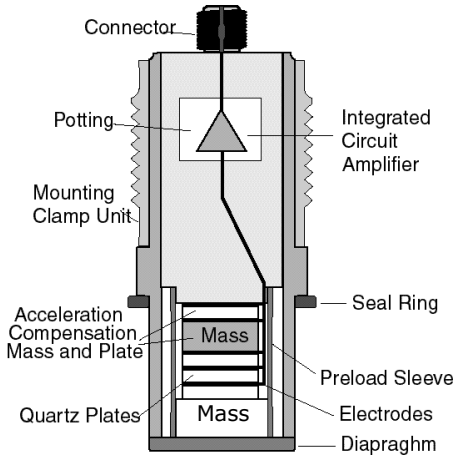

pictorial construction

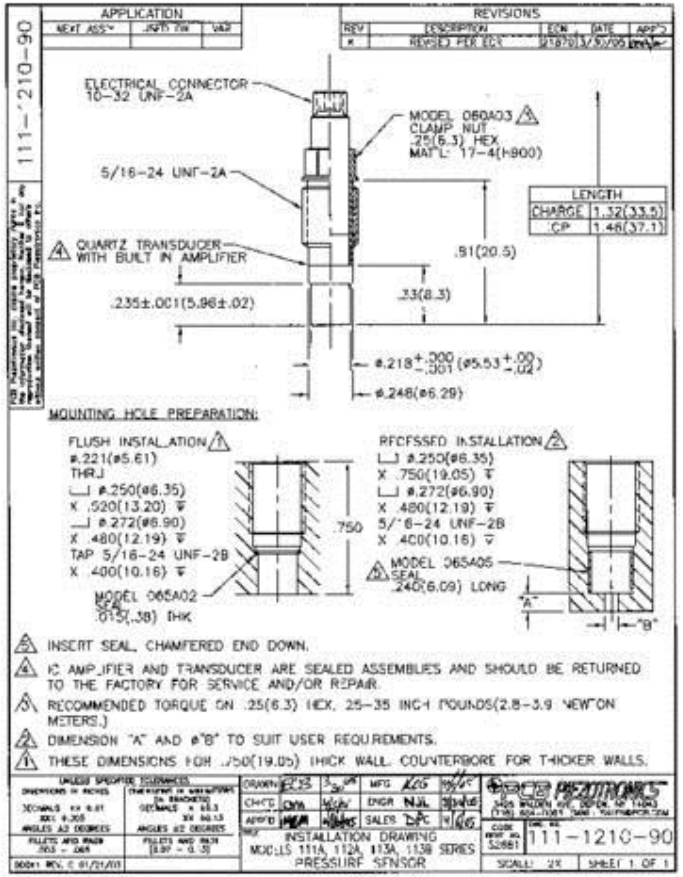

TCU
PCB PIEZOTRONICS INC

Model 113 Also Has Fast Rise time (500 KHz Resonant Frequency)

Example: 113 in charge or ICP® mode to 15,000 psi.

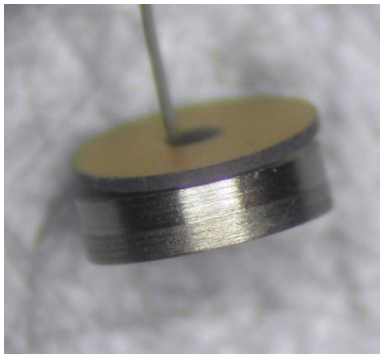

acceleration compensation crystal on mass

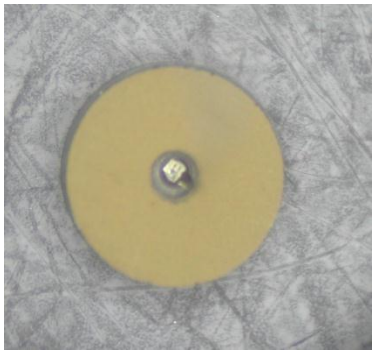

through hole-see wire

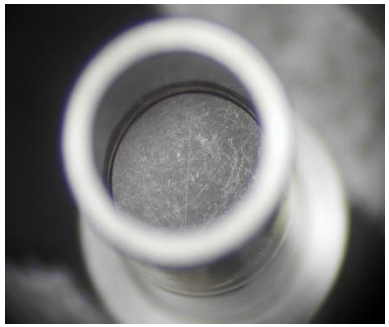

mass in preload sleeve

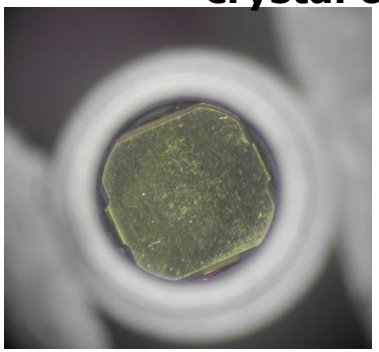

electrode on top of stack of 3 quartz crystals

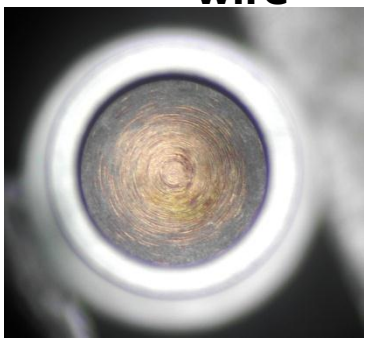

end piece before preload/spot weld

PCB PIEZOTRONICS INC

Dynamic Pressure Measurements

Underwater Explosions

TCU
PCB PIEZOTRONICS INC.

Underwater Explosion

Note: underwater Explosions will be discussed NOW

Characteristic of An Underwater Explosion (It's not a blast!)

- Bubble formation due to boundary expansion.
- Cavitation can occur (e.g., on surface).
- Propagation velocity becomes sonic by 10 diameters of the explosive source.

Underwater Explosions

Surface deflection (tension) creates cavitation bubbles

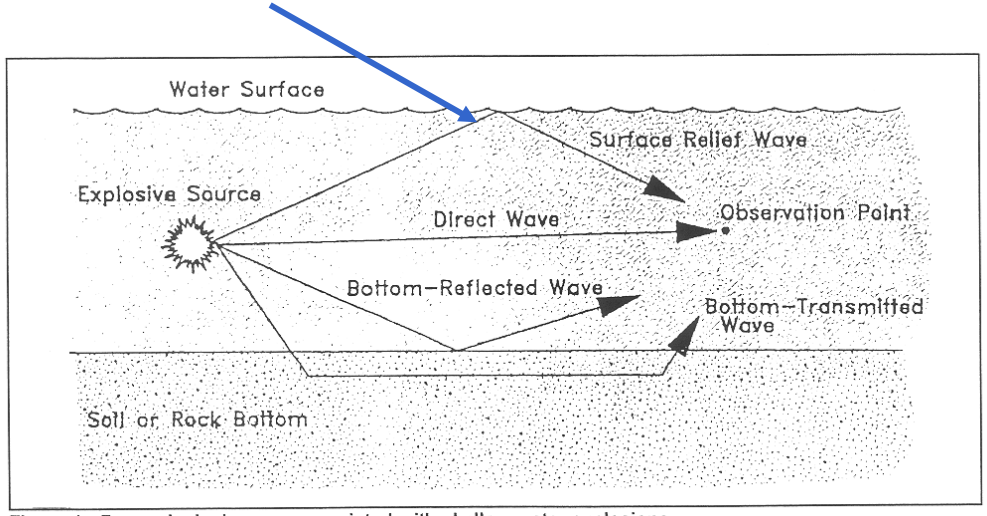

Figure 1. Four principal waves associated with shallow-water explosions

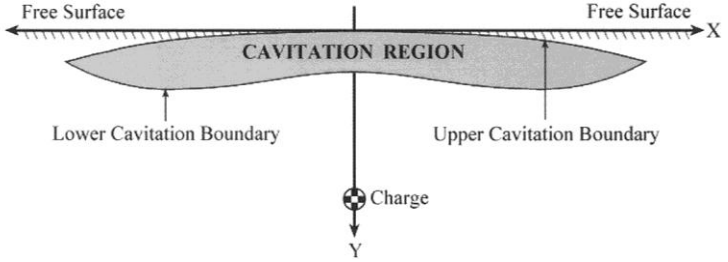

Cavitation from a symmetric charge

Four Principal Waves Associated With Shallow Water Explosions

Engineering and Design: Underwater Blast Monitoring, Corps Engrs., July 15, 1991

Underwater Explosions

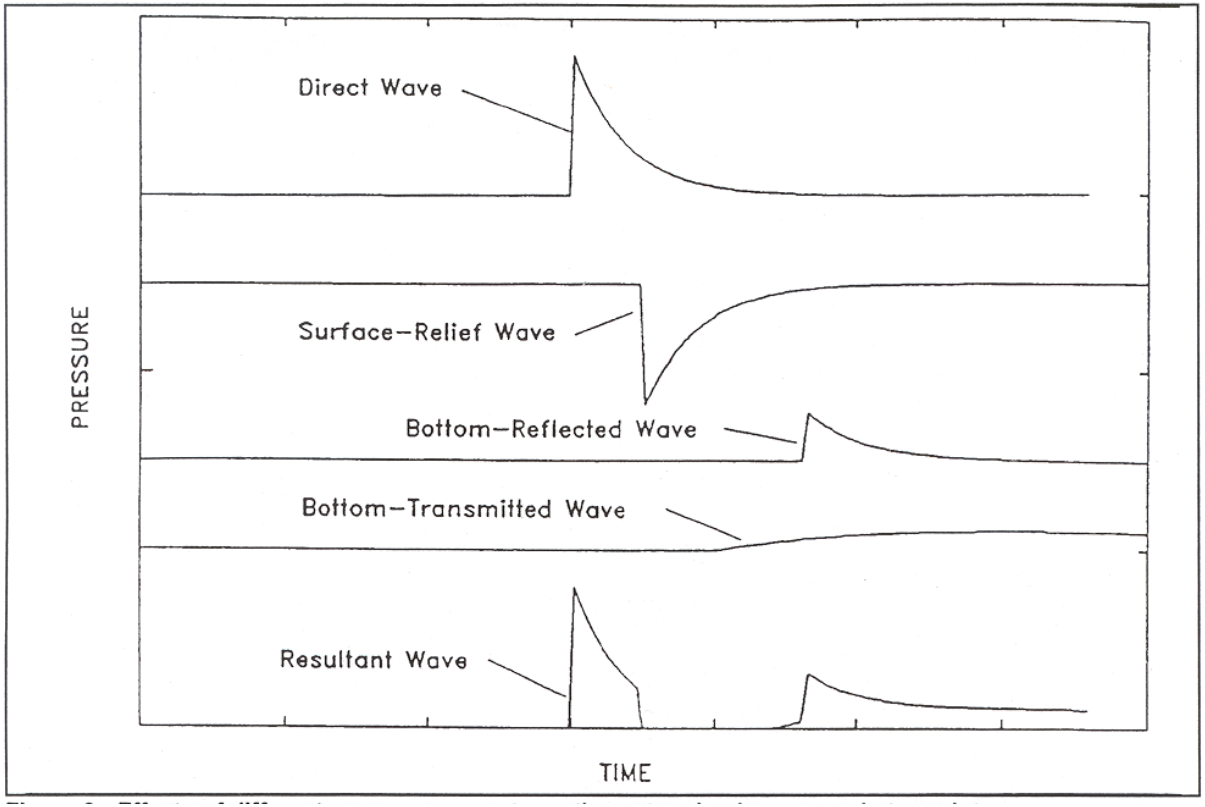

Ideal Effect of Different Wave Components on Underwater Blast Measured at a Point

Engineering and Design: Underwater Blast Monitoring, Corps Engrs., July 15, 1991

Z-Cut Tourmaline Used to Measure Pressure

- hydrostatically sensitive
  - USN interest initiated with WWII
    - at Taylor, David Taylor, now Carderock (NSWC)
  - first underwater testing performed in UK by D. A. Keys, 1921
- cylindrical discs sized from 1/8” to 2” diameter
  - can be electrically paralleled
- coated with wax, rubbers, and “booted”
- NSWC uses today in booted configuration with typically ¼ “ dia. cylindrical face parallel to shock into charge converters.
- impedance converters used in industry
  - enable smaller sizes, faster rise times
  - cables less burdensome

Tussing, Accuracy and Response of Tourmaline Gages for Measurement of Underwater Explosion Phenomena, NSWC

Why Tourmaline?

$$P_{xx} = 0\,\sigma_{xx} + 0\,\sigma_{yy} + 0\,\sigma_{zz} + 0\,\tau_{yz} + d_{15}\,\tau_{zx} - 2d_{22}\,\tau_{xy}$$

$$P_{yy} = -\,d_{22}\,\sigma_{xx} + d_{22}\,\sigma_{yy} + 0\,\sigma_{zz} + d_{15}\,\tau_{yz} + 0\,\tau_{zx} + 0\,\tau_{xy}$$

$$P_{zz} = d_{31}\,\sigma_{xx} + d_{31}\,\sigma_{yy} + d_{33}\,\sigma_{zz} + 0\,\tau_{yz} + 0\,\tau_{zx} + 0\,\tau_{xy}$$

Use Z-cut: output = $(2d_{31} + d_{33})(-p)$

TCU

PCB PIEZOTRONICS INC

Navy Gages (Taylor Model Basin, now Carderock)

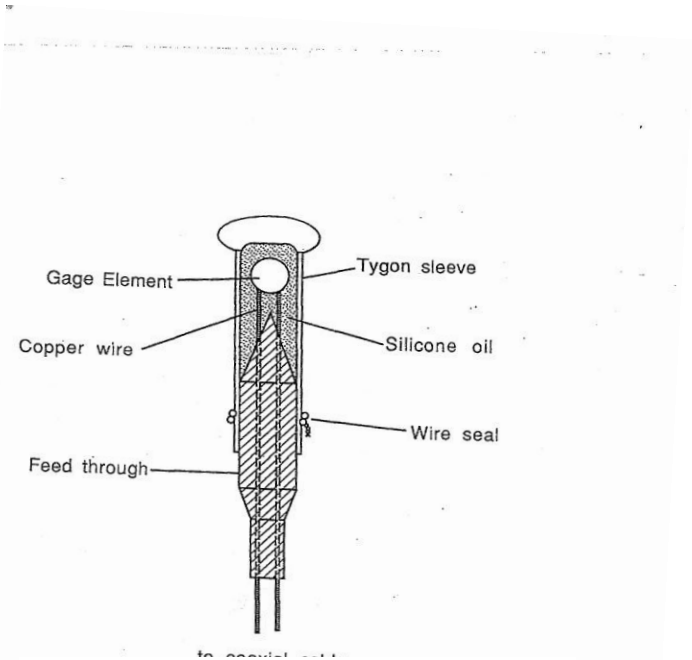

Navy Configuration

Underwater Explosions

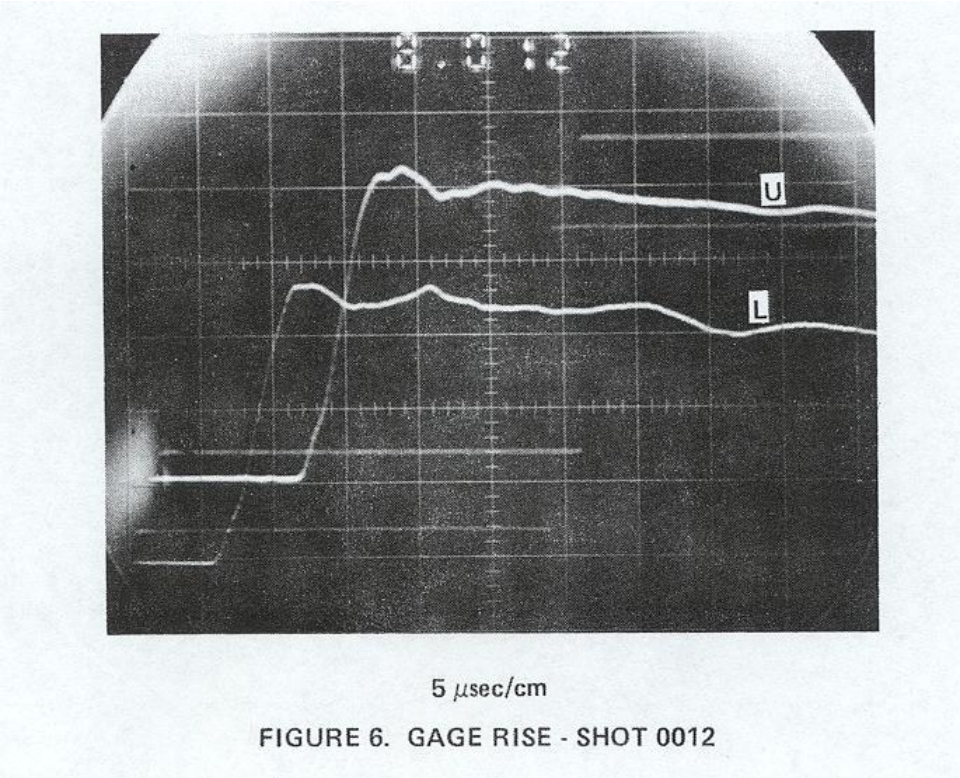

Rise time of ¼" tourmaline sensing element (Navy gage)

Tussing, Accuracy and Response of Tourmaline Gages for Measurement of Underwater Explosion Phenomena, NSWC

Underwater Explosions

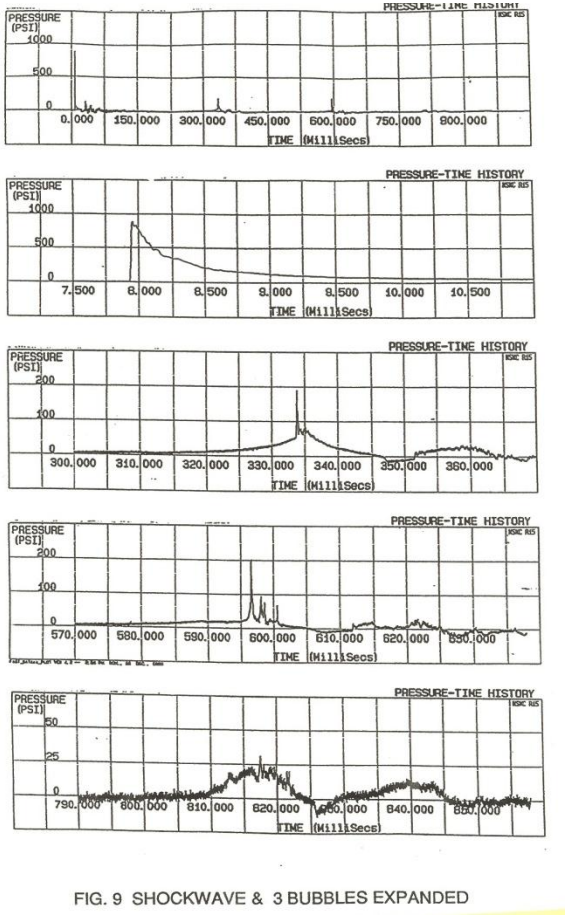

FIG. 9 SHOCKWAVE & 3 BUBBLES EXPANDED

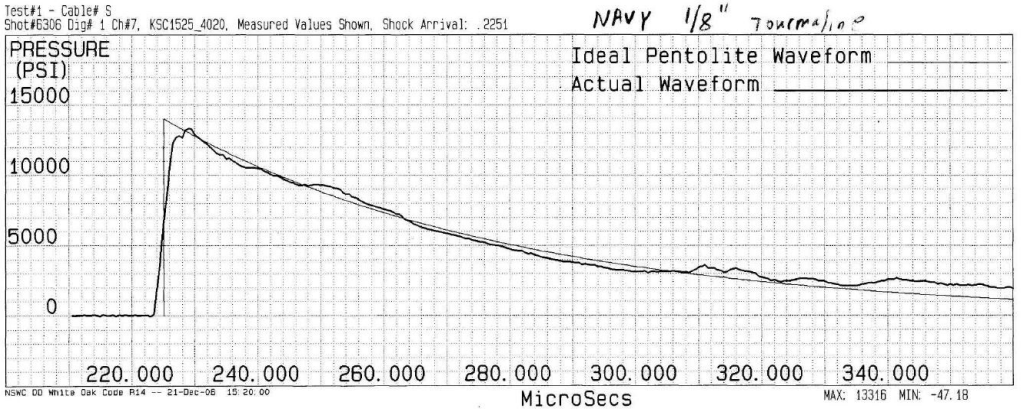

Carderock December 2006

Tussing, Tourmaline Gauge for Navy's Underwater Explosion Shock Measurements, NISTIR 4828, 23-24 April, 1991

Underwater Explosions: Commercial Sensor

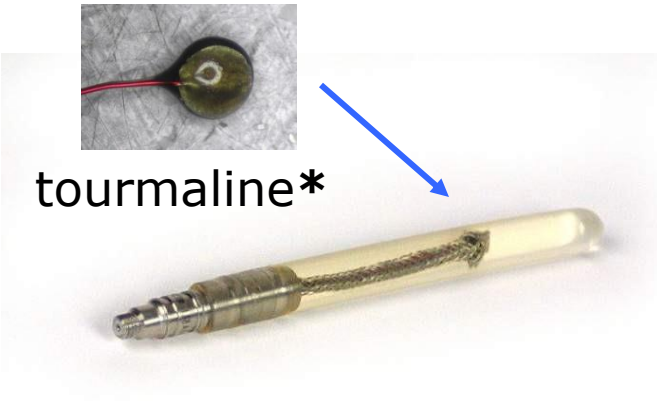

PCB 138 Series
500 – 50,000 psi

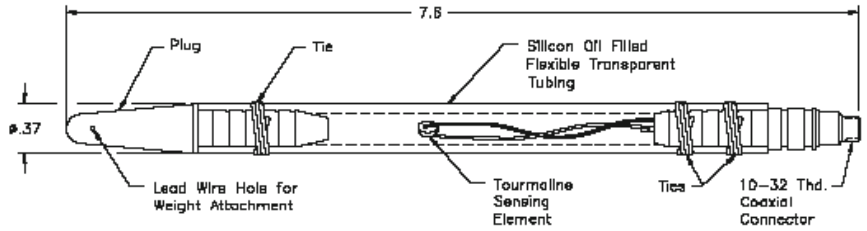

Models 138A01, A05, A10, A25, A50
Standard Length

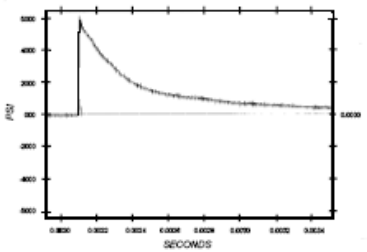

Typical Underwater Blast Record
from a 138 Type Sensor

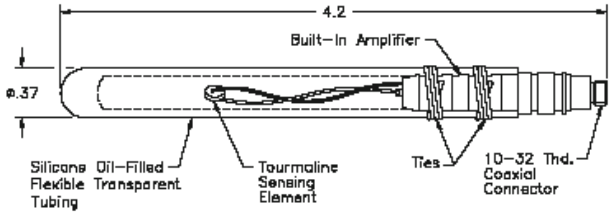

Models 138A02, A06, A11, A26, A51
Short Length

Acoustic Impedance Approximated to Water =
[(Bulk Modulus(B))(density(ρ))]½

Uses hydrostatic response of tourmaline cut perpendicular to the z-axis.

Fielding Application in Tank

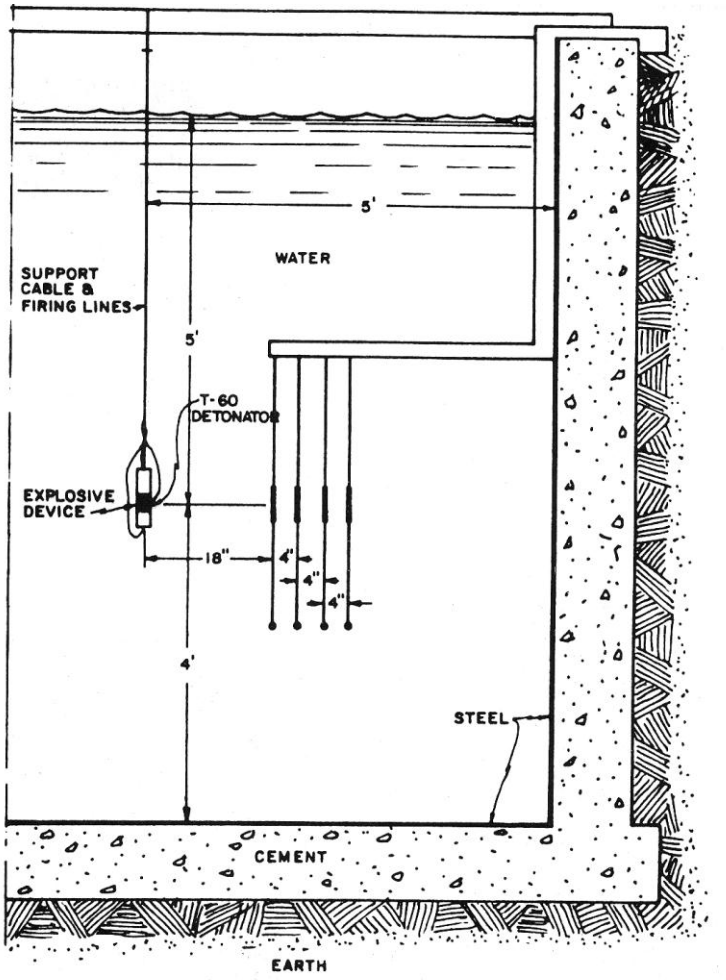

3-D of Representative Close-in Application

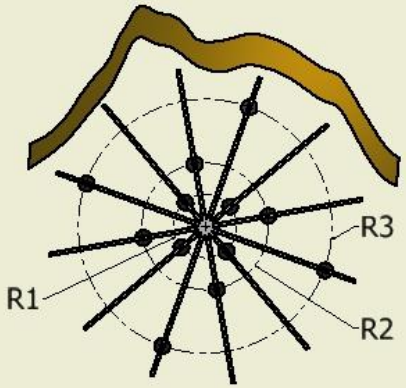

TOP

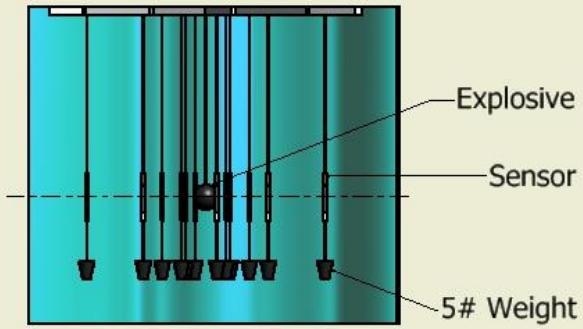

FRONT

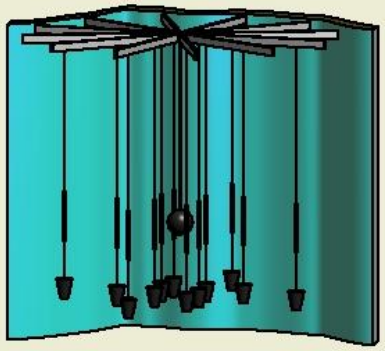

ISOMETRIC

Navy and PCB Transducer Comparison Peak = 3000 psi

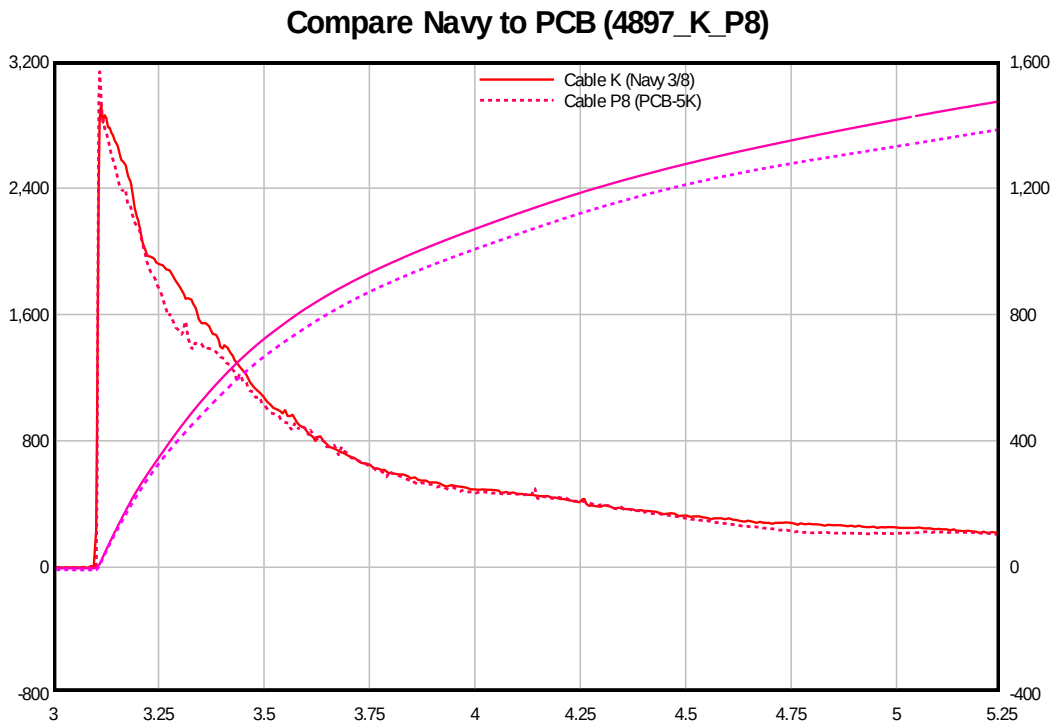

Dynamic Pressure Measurements

Acoustics: Briefly

TCU
PCB PIEZOTRONICS INC.

A Few Words on Microphones: Condenser Type

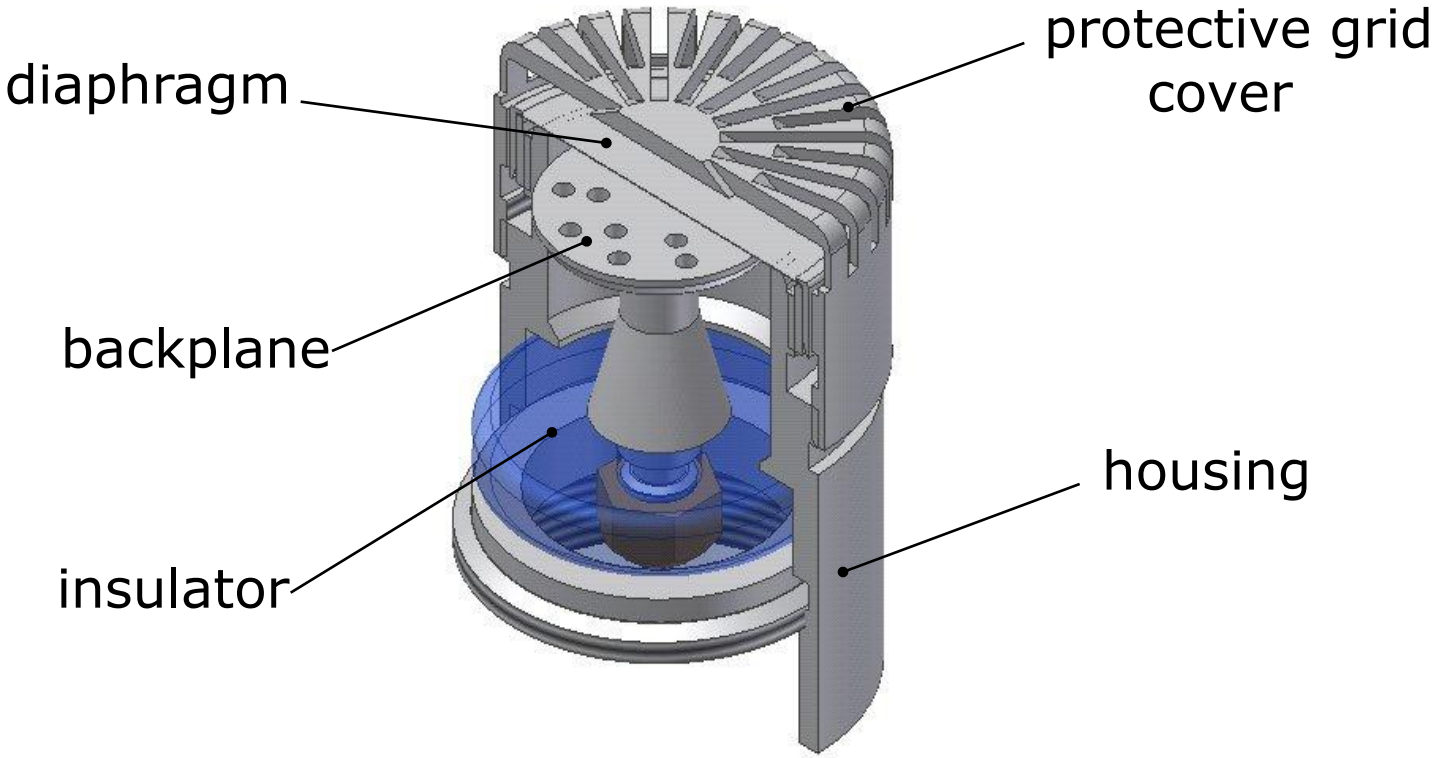

Polarization Types

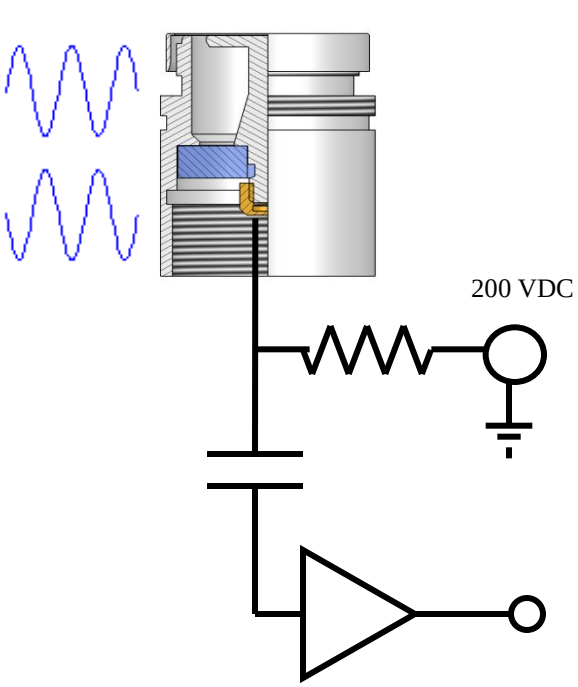

externally polarized

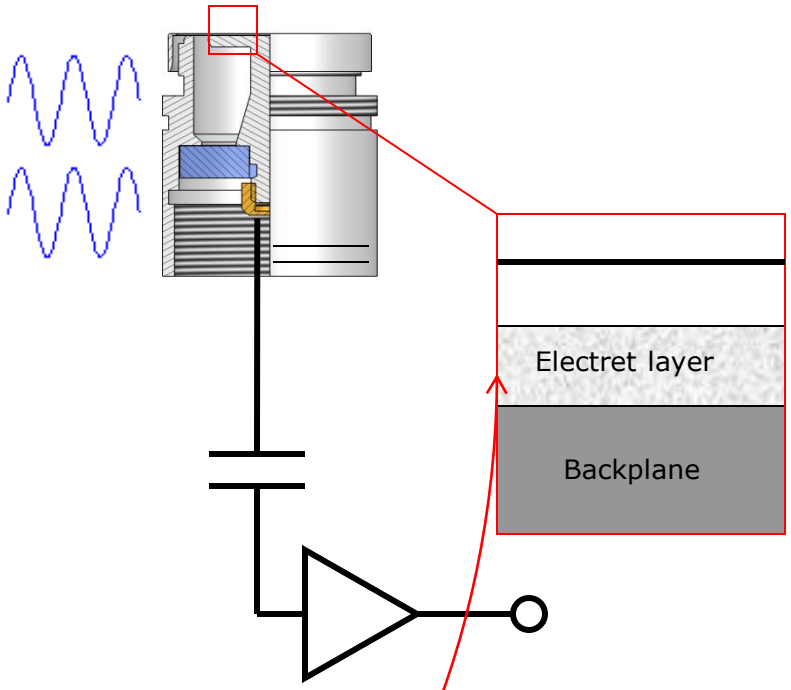

prepolarized

An *electret* is a stable dielectric material with a permanently-embedded static electric charge (which, due to the high resistance and chemical stability of the material, will not decay for hundreds of years).

Pros and Cons

Externally Polarized

(Traditional)

- Stability at high temperatures (150 °C)
- Higher voltage preamp can increase max amplitude limit 3-6 dB
- High Cost for cables and power supplies

Prepolarized

(Modern)

- Will not short out in high humidity
- Lower cost per channel
- Set-up time savings
- Interchangeable with ICP® sensors
- Better for portable applications

Microphone Setups

Externally polarized microphone setup

Prepolarized microphone setup

IEC Standards Govern

- Condenser microphones
  - IEC 61094
    - Laboratory standard –0
    - Working standard –4
- Sound Level Meters
  - IEC 61672
    - Class 1
  - IEC 651
    - Type 1
    - Type 2

IEC Standards: Sound Level Meters

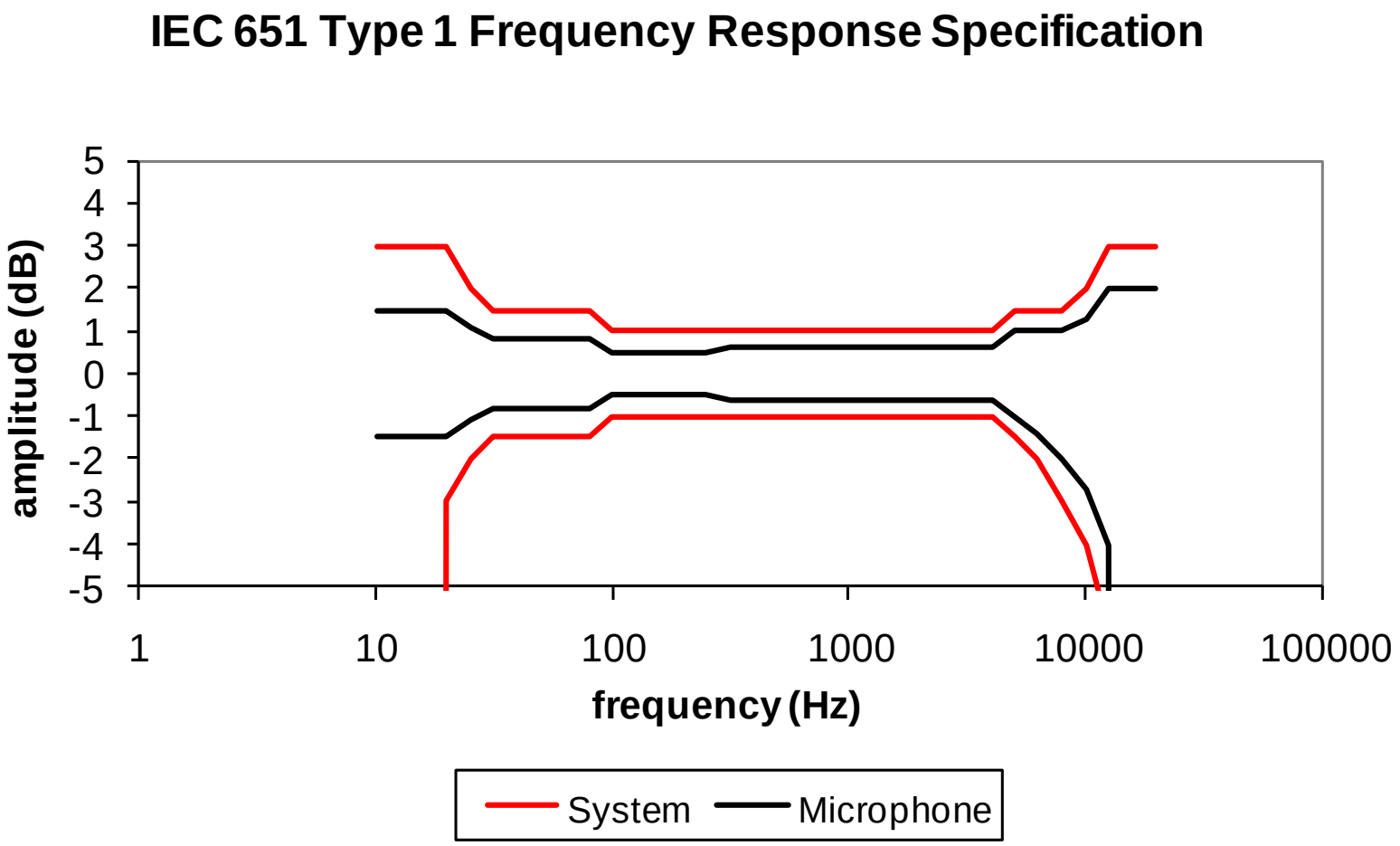

IEC Standards: Weighing Curves

A-Weighting

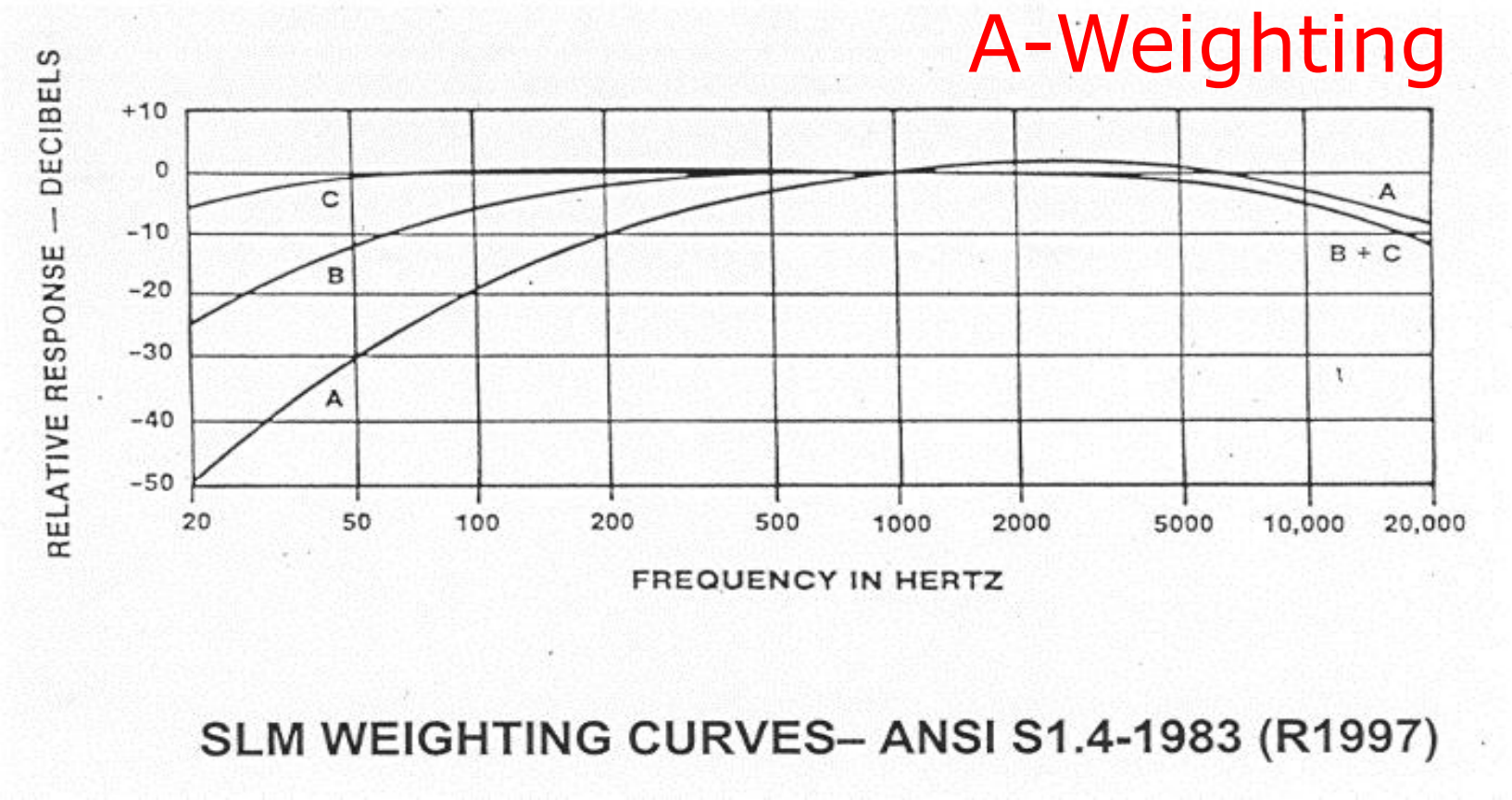

SLM WEIGHTING CURVES– ANSI S1.4-1983 (R1997)

Sound Reference Levels

- The main criteria to describe sound, is based upon the amplitude of the sound pressure fluctuations. The lowest amplitude that a healthy human ear can detect is 20 millionths of a Pascal (20mPa). Since the pressure numbers represented by Pascals are generally very low and not easily managed, another scale was developed and is more commonly used, called the Decibel (dB). The decibel scale is logarithmic and more closely matches the response reactions of the human ear to the pressure fluctuations. Here are some examples of typical sound pressure levels to use as a reference:
- **Level References**

0 dB = 0.00002 Pa Threshold of Hearing
60 dB = 0.02 Pa Business Office
80 dB = .2 Pa Shop Noise
94 dB = 1 Pa Large Truck
100 dB = 2 Pa Jackhammer
120 dB = 20 Pa Airplane Take-Off
140 dB = 200 Pa Threshold of Pain

Dynamic Pressure Measurements

Mounting and Other Considerations

TCU

PCB PIEZOTRONICS INC.

More on Thermal Response

The off-shelf pencil probe utilizes effectively the same transducer element as the ATC pencil probe, however the element of the latter is protected by a thin layer of RTV. This layer delays and attenuates long-term thermal drift as in Figure 6.

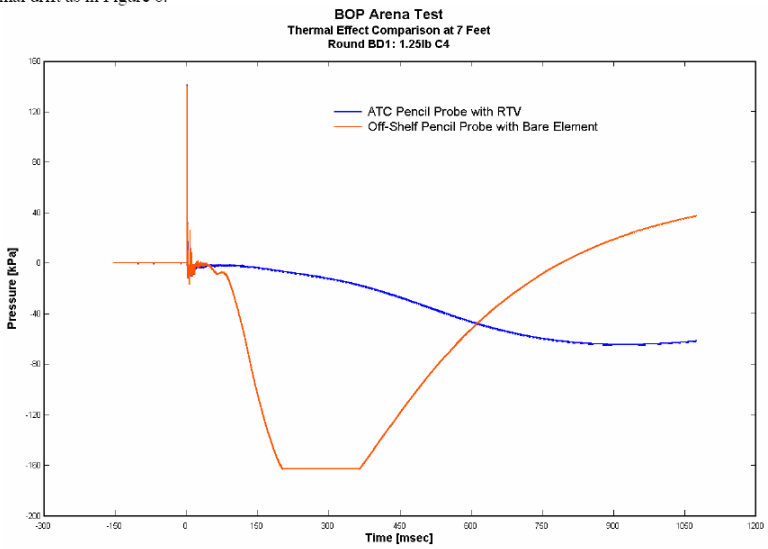

Examples of Special Pressure Sensors

Helium or water cooling enable operations in rocket engines. Ceramic coating is also applied.

NATO compatible transducers

Carefully Prepare Pressure Transducer Mounting Ports

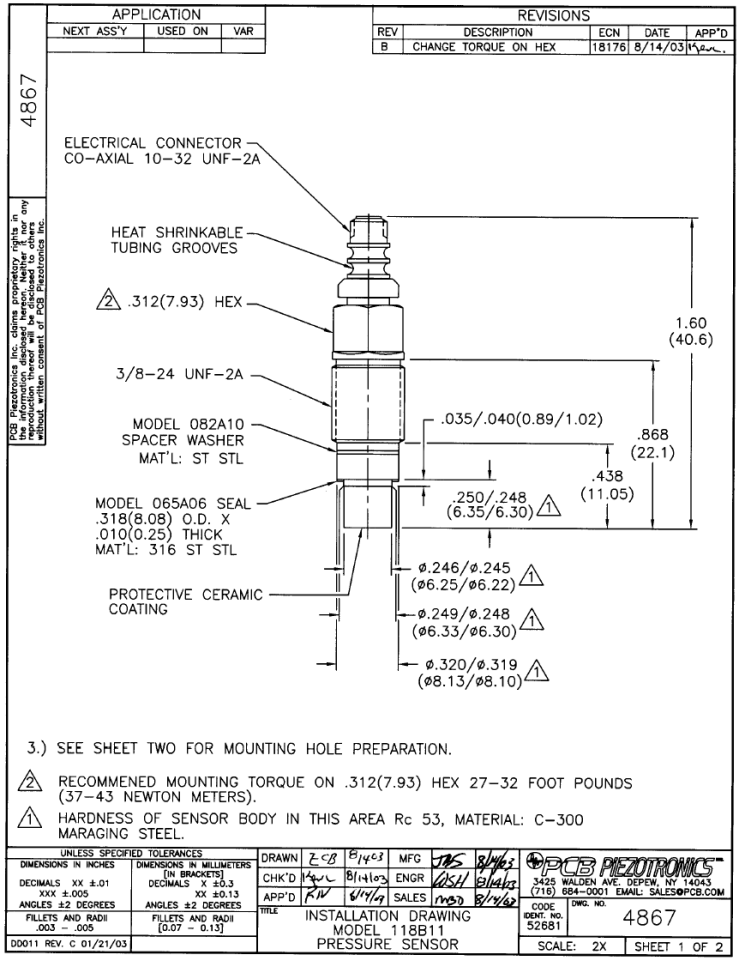

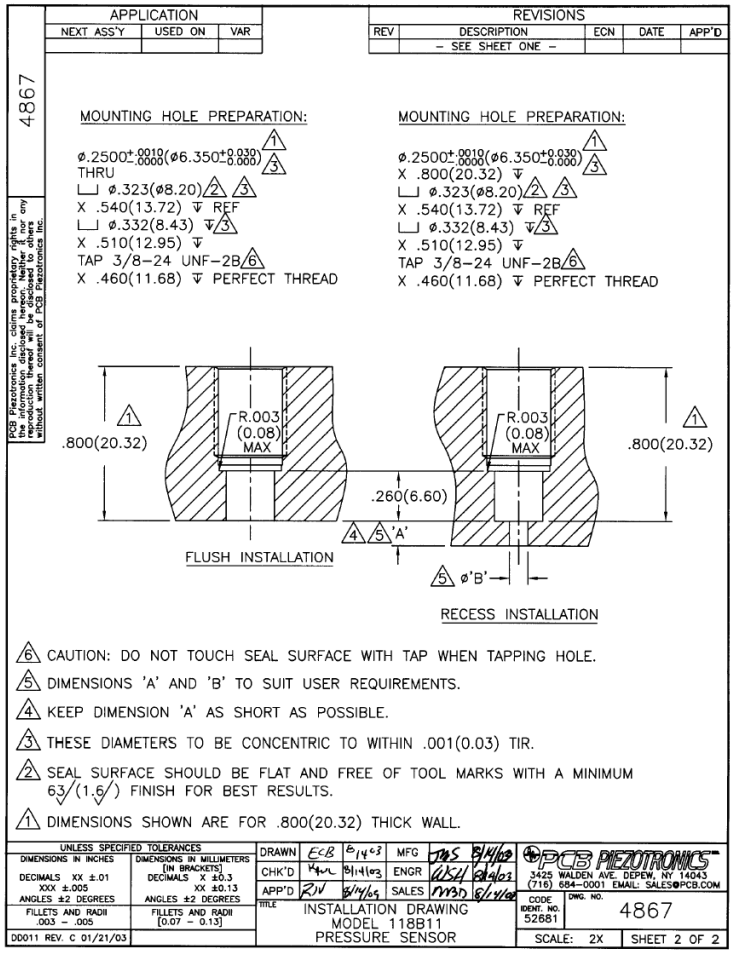

Recesses Mounts Can Cause Problems

$$f_n = c/(4\pi)[\pi d^2/(V(L + .85d))]^{1/2}$$

In this equation, c is the velocity of sound of the gas being measured (≅ 1100 feet/second for room-temperature air), V is the volume of the lower cavity, L is the length of the entrance tube, and d is the diameter of this tube.

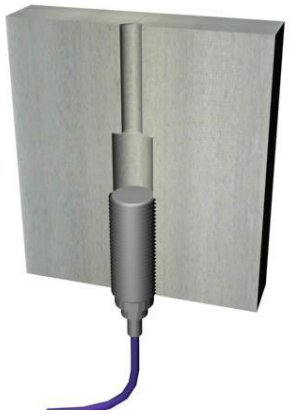

$$f = [(2n-1)c]/4L \quad (2)$$

where n = 1 corresponds to the first natural frequency; c and L have the same meaning as before.

It's been suggested that the Helmholtz resonator model (top) should transition to the wave equation model (bottom) when the volume of the tube is about one-half the volume of the chamber.

TCU

PCB PIEZOTRONICS INC

Recesses Mounts Can Cause Problems

Fundamental natural frequency of a column of dry air with one end closed (Top = 500°C, Mid = 25°C, Lower = -50°C)

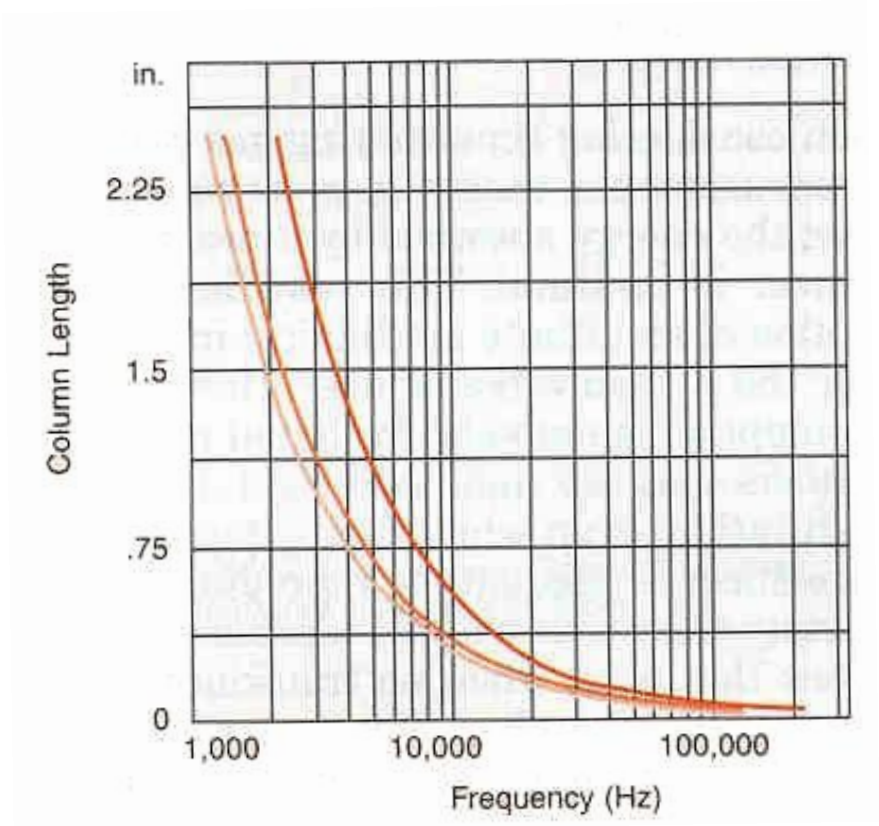

TCU
PCB PIEZOTRONICS INC

Ringing is Due to Mount

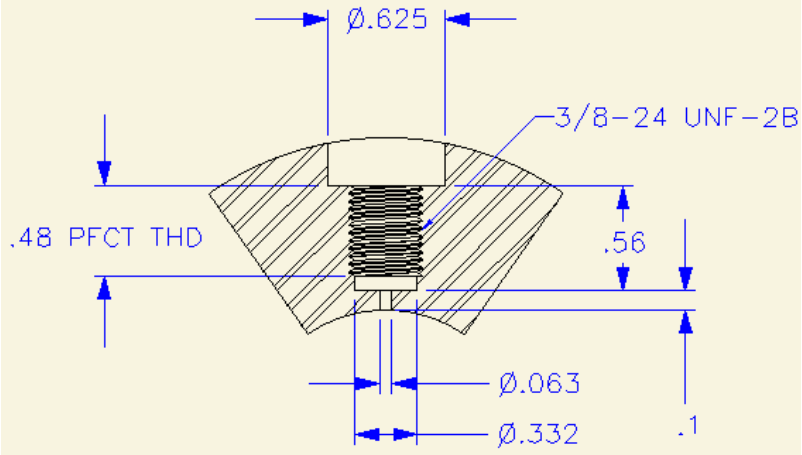

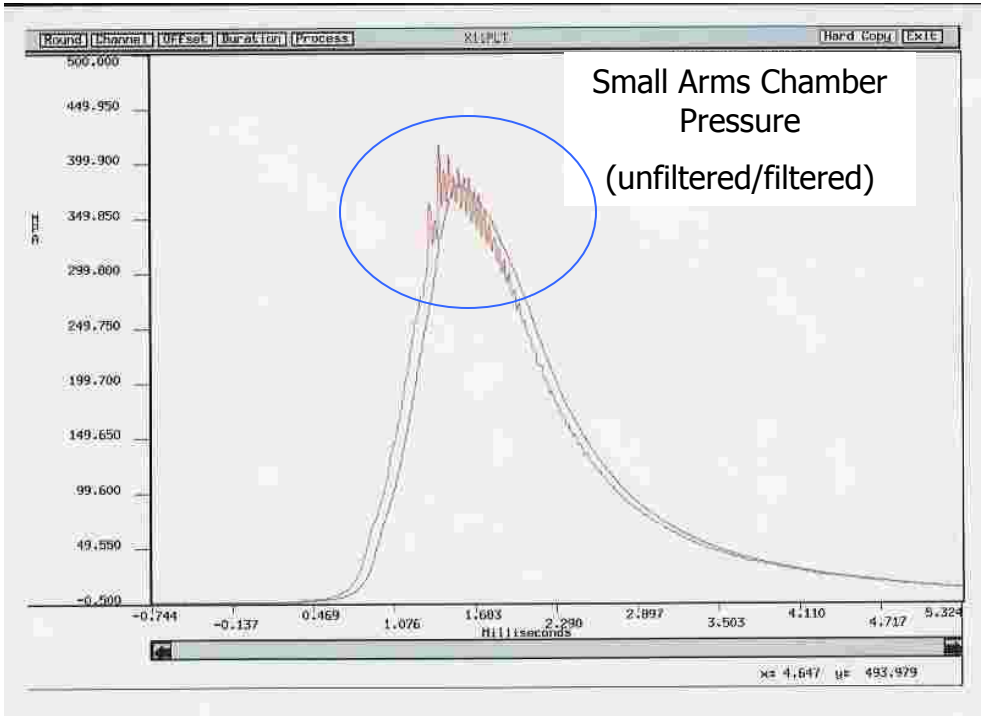

Recess Mounting is a Much Greater Problem in Blast Measurements

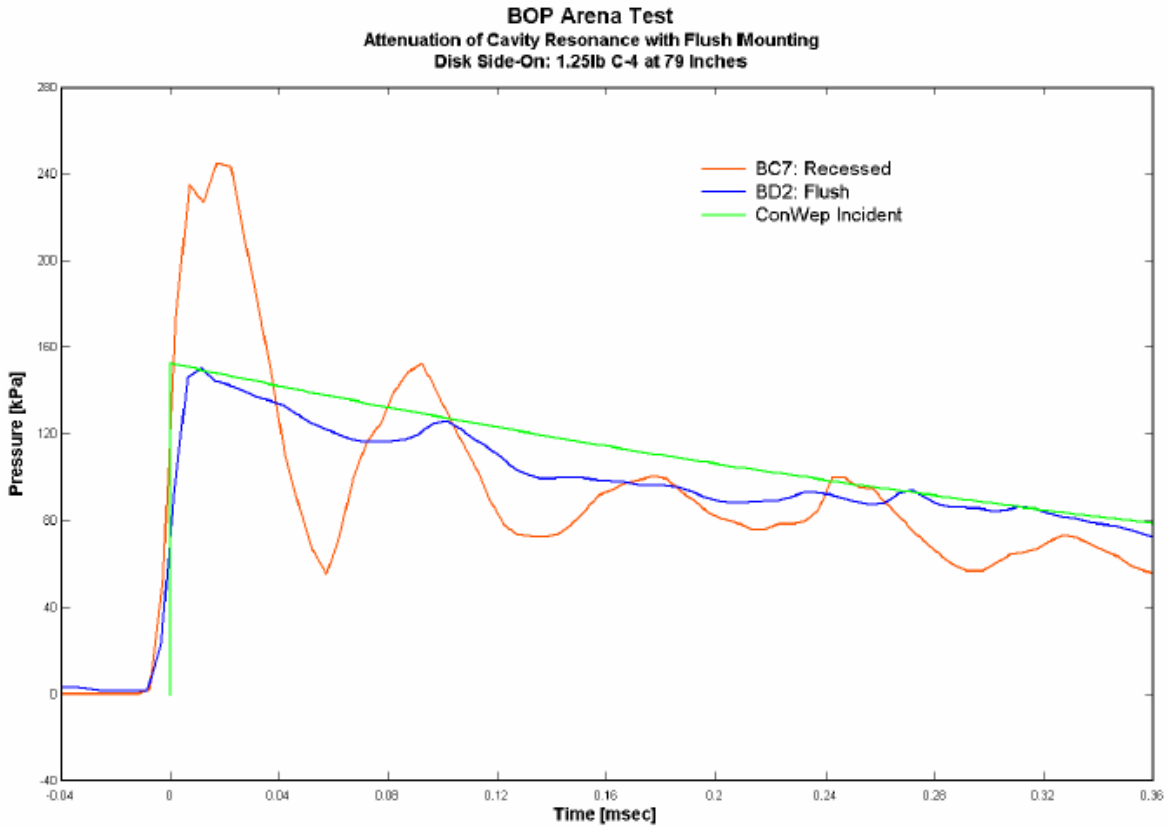

Figure 11. Elimination of cavity resonance with flush mounting.

Averaging Effect Associated With Side On Measurements

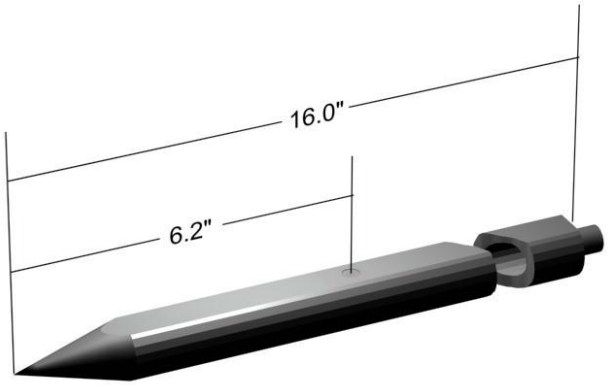

e.g., 137 Pencil Probe

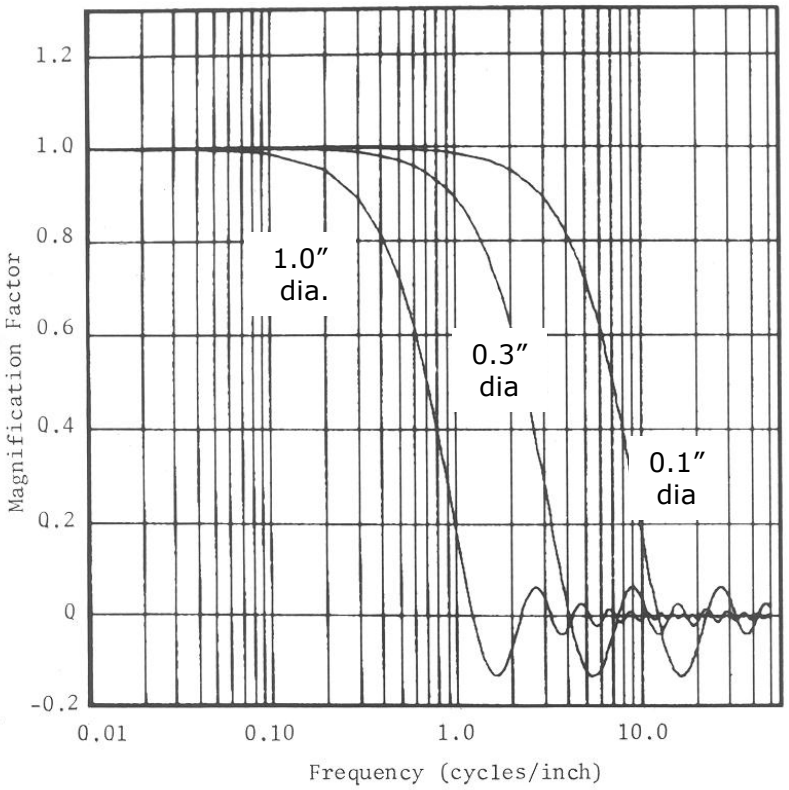

Spatial Averaging Frequency Response

PCB PIEZOTRONICS INC

Microphone Demonstrating Spatial Averaging

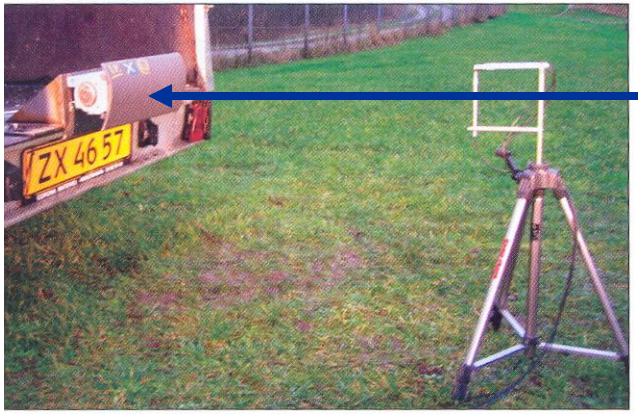

Overpressure at auto airbag deployment

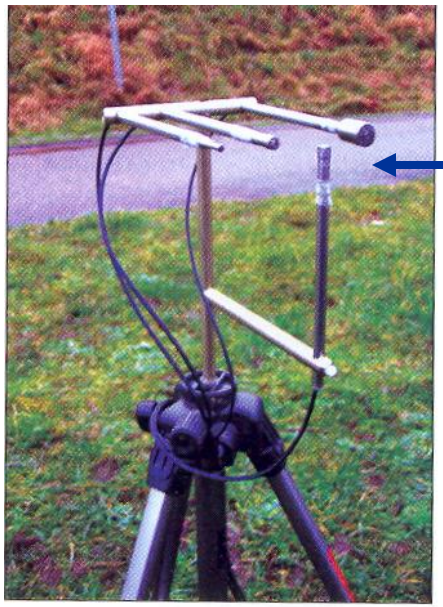

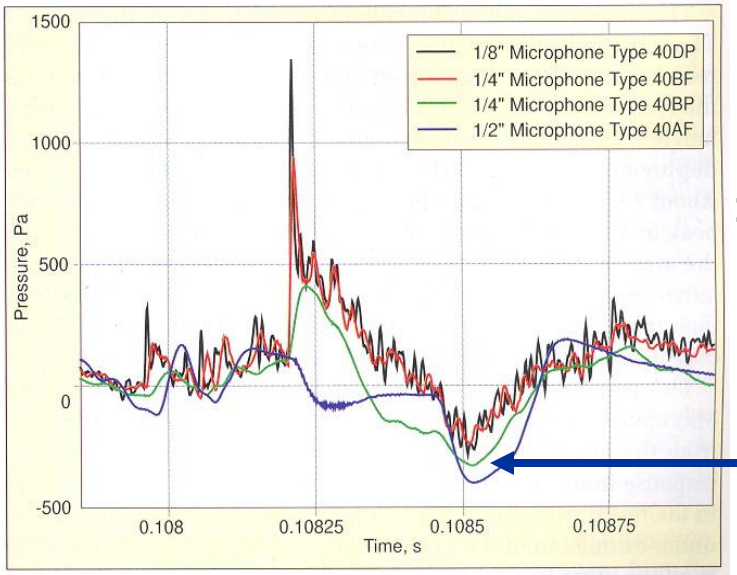

1/8″ mic = 140 KHz response
¼″ mic = 80 KHz response
½″ mic = 20 KHz response
¼″ mic (spatial averaging - green)

Microphone Mounting & Frequency Response in Sound Field

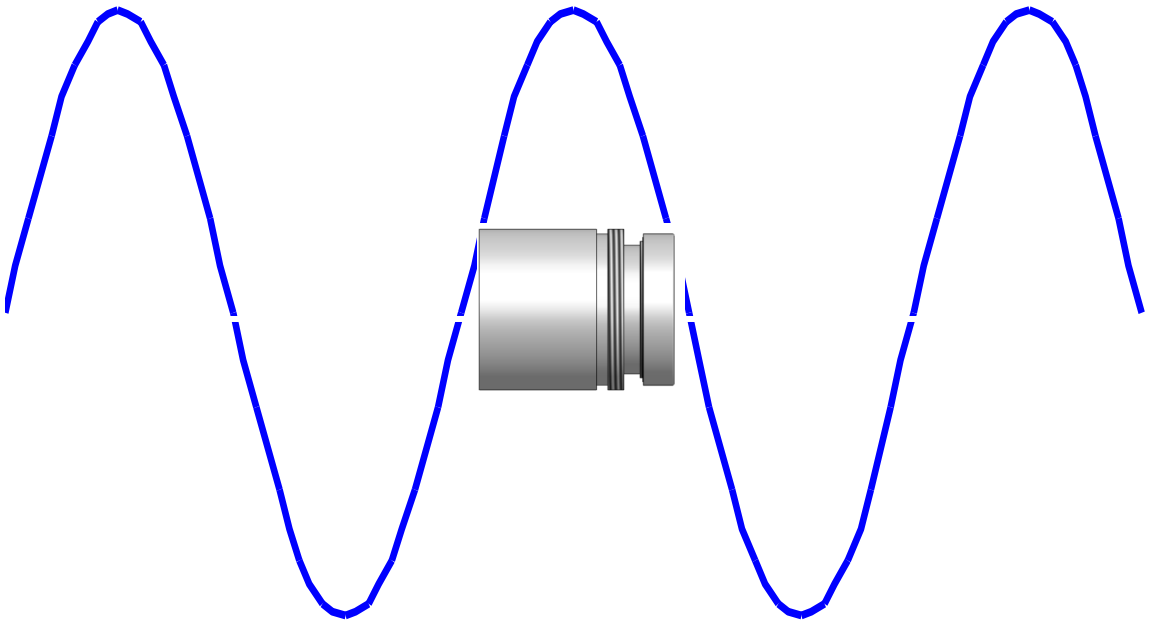

Microphone in Sound Field

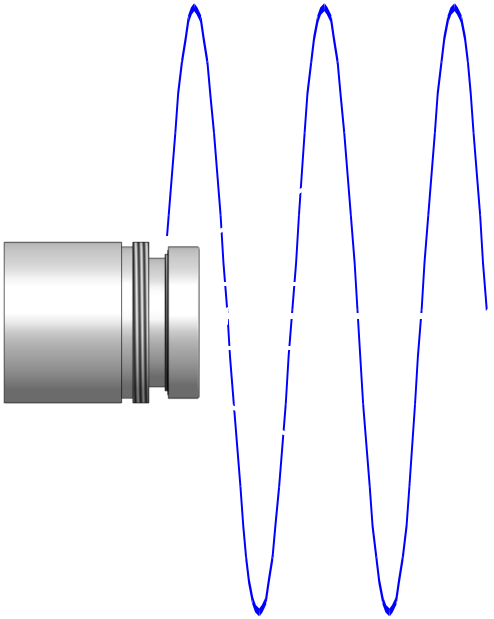

Reflections from the microphone will occur with higher frequencies

Free-Field (0° incidence)

- Sound field consists of plane wave propagating in a single defined direction
- *Free-Field Microphone* designed for flat response after applying appropriate correction to compensate for microphone presence
- Where used
  - Anechoic chambers
  - Open areas free of reflecting surfaces

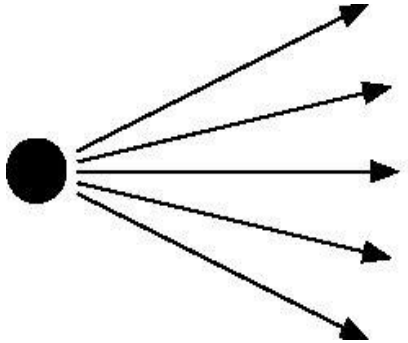

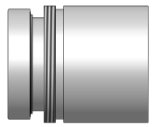

Random Incidence

- Sound waves arriving simultaneously from all directions with equal probability (Diffuse-Field)
- *Random Incidence Microphone* designed for flat response after again applying appropriate correction
- Where used
  - Hard sound reflecting walls / Reverberation Chambers
  - Distributed sound sources

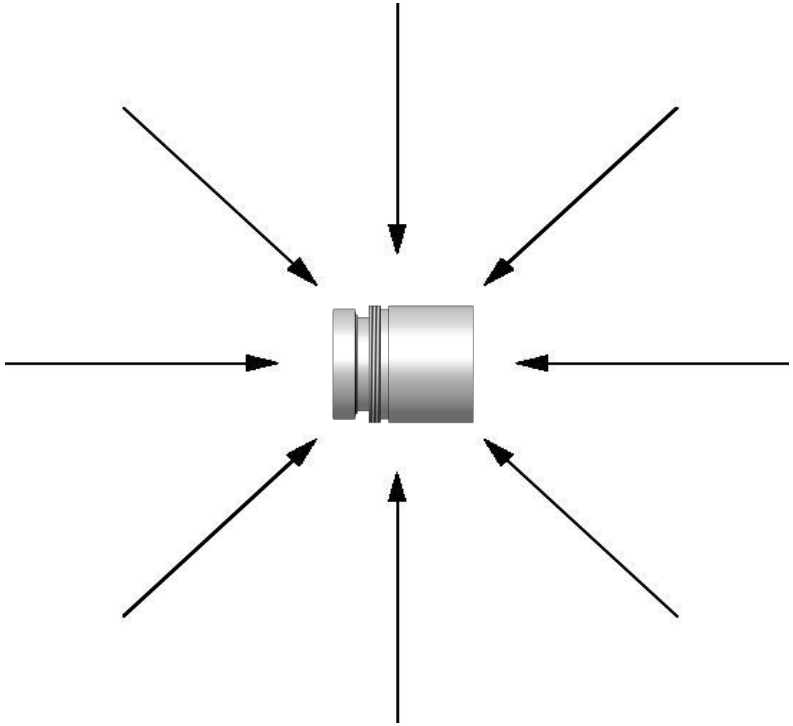

IEC 61183

Pressure Microphone

- *Pressure Microphone* designed for flat response with no correction
- "Disturbed" Sound Fields
- Where used
  - Small enclosures
  - Couplers (calibration)
  - Flush mounted in wall
  - Near-field

e.g., Microphone Correction Curves

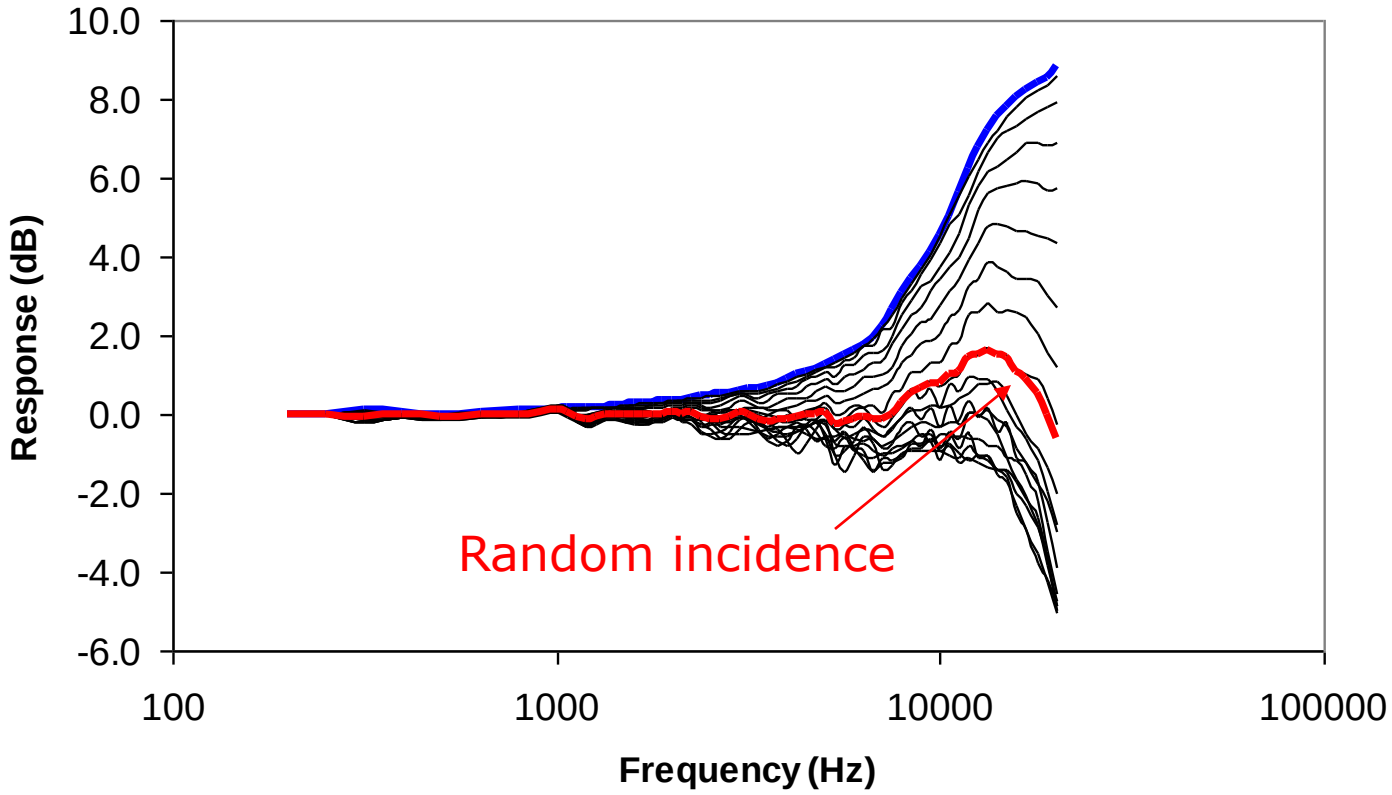

Directional Characteristics

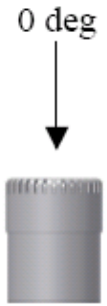

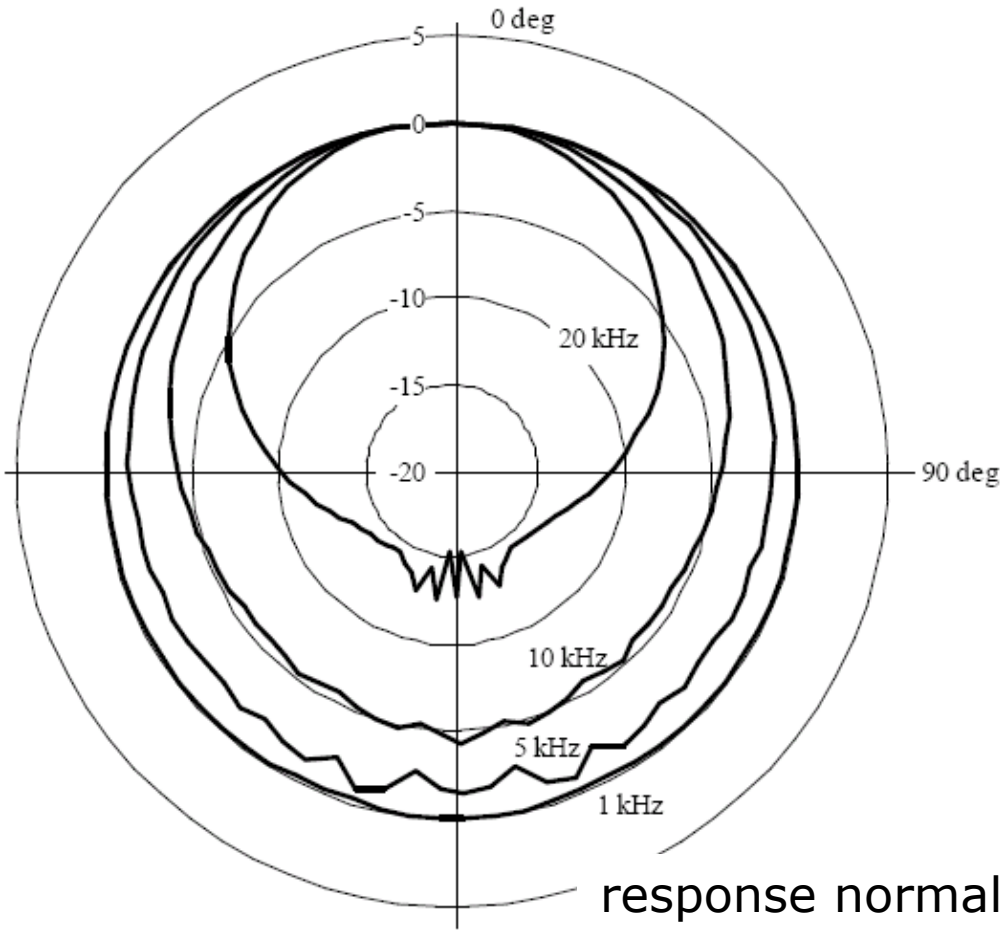

Polar Plot

response normalized at 0 dB

Placebo Transducers

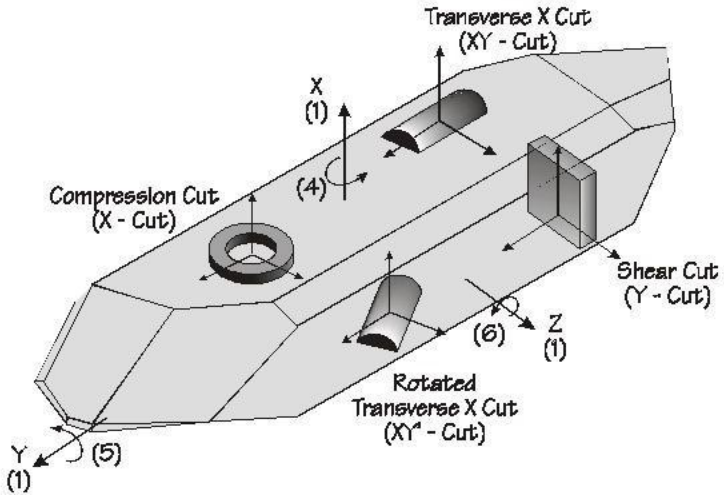

thermoelectric, photoelectric, electromagnetic, triboelectric, and other energy induced effects can result in additive electrical signals

$$P_{xx} = d_{11}\sigma_{xx} - d_{11}\sigma_{yy} + 0\,\sigma_{zz} + d_{14}\tau_{yz} + 0\,\tau_{zx} + 0\,\tau_{xy}$$

$$P_{yy} = 0\,\sigma_{xx} + 0\,\sigma_{yy} + 0\,\sigma_{zz} + 0\,\tau_{yz} - d_{14}\tau_{zx} - 2d_{11}\tau_{xy}$$

$$P_{zz} = 0\,\sigma_{xx} + 0\,\sigma_{yy} + 0\,\sigma_{zz} + 0\,\tau_{yz} + 0\,\tau_{zx} + 0\,\tau_{xy}$$

TCU

PCB PIEZOTRONICS INC

Placebo Test Example

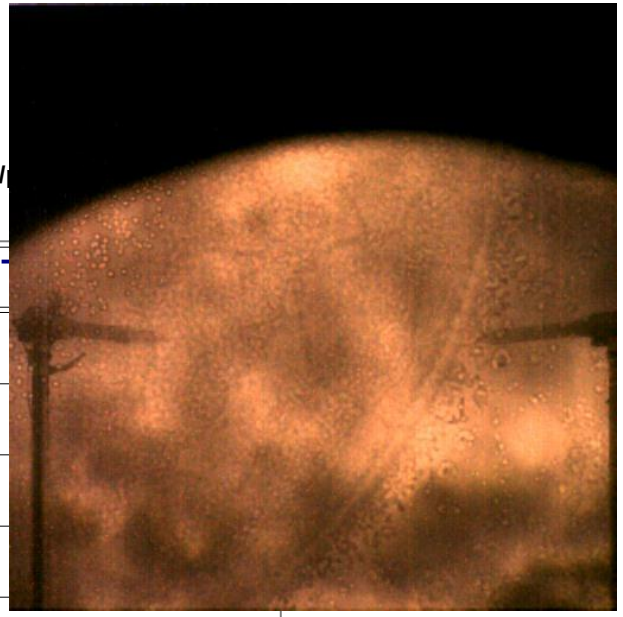

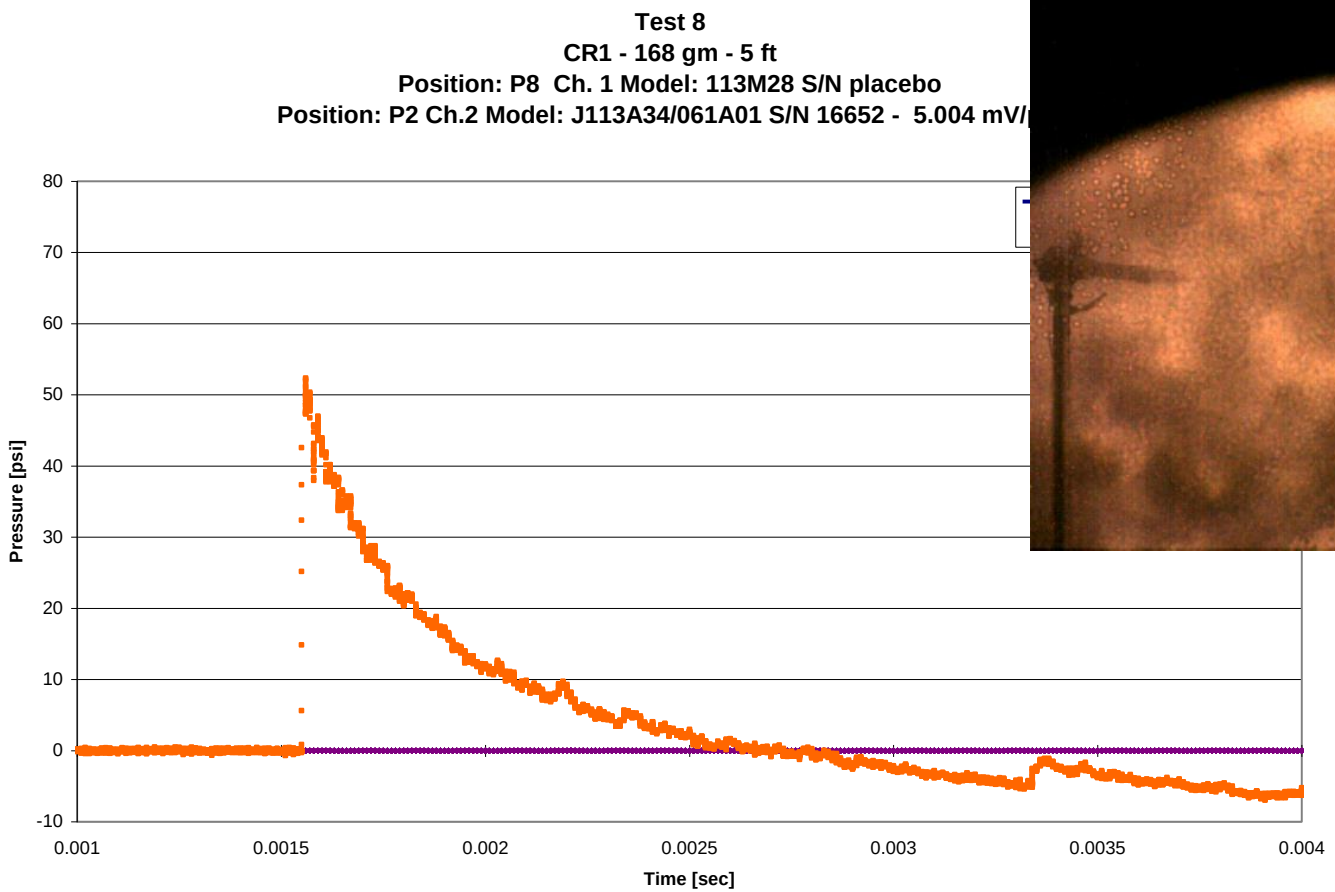

Check Channels

Solutions

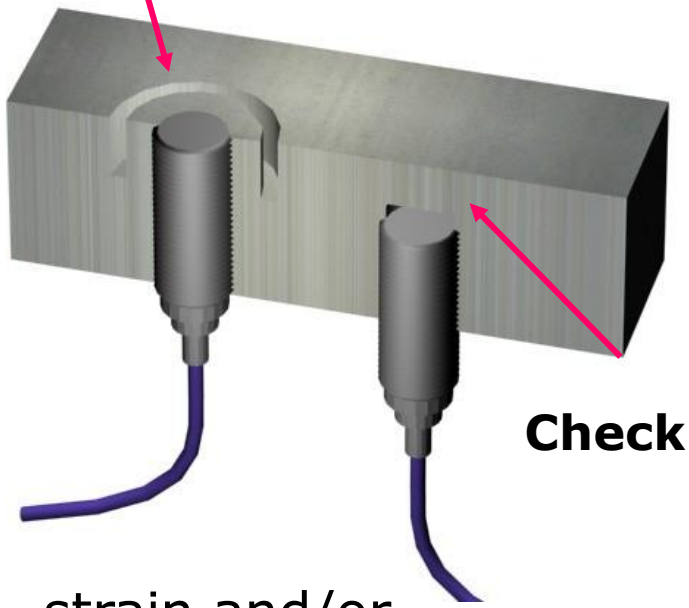

Check Channel

strain and/or
acceleration checks

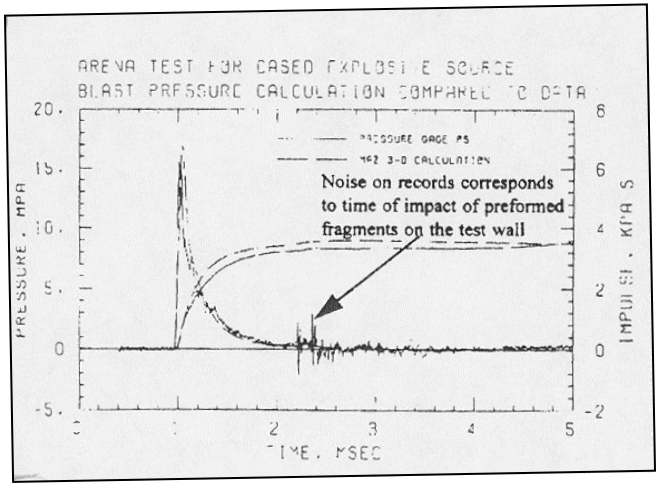

Problem: undocumented fragment impact while measuring reflected pressure (MEMS sensor)

TCU

PCB PIEZOTRONICS INC

A Brief Summary to Date

- We have looked at specifics of the dynamic pressure measuring problem including:
  - measurement of reflected and static pressures in air blast,
  - underwater measurements
  - mounting considerations,
  - environmental effects, and
  - placebo transducers

In Conclusion: Thanks for your attention!

TCU

PCB PIEZOTRONICS INC

Here's Some Specific References

- Baker, Wilfred E, Explosions in Air, University of Texas Press, 1973.
- Kinney, Graham, Explosive Shocks in Air, Springer-Verlag, 1985.
- Cole, Robert H., Underwater Explosions, Dover Publications, 1948.

Some personal more recent references:

- Walter, Patrick L., "Measuring Static Overpressures in Air Blast Environments", PCB TN-27.
- Walter, Patrick L. "Airblast and The Science of Dynamic Pressure Measurements", *Sound and Vibration, pp 10-16, December 2004.*
- Walter, Patrick L., "Shock and Blast Measurement - Rise Time Capability of Measurement Systems?", PCB TN-11.
- Walter, Patrick L., "Introduction to Air Blast Measurements – Part I", PCB TN-12.
- Walter, Patrick L. "Introduction to Air Blast Measurements – Part II: Interfacing the Transducer", PCB TN-13.
- Walter, Patrick L. "Introduction to Air Blast Measurements – Part III: Guaranteeing that Validated Pressure Measurements are Acquired", PCB TN-19.
- Walter, Patrick L. "Introduction to Air Blast Measurements – Part IV: Getting the Signal Down the Cable", PCB TN-20.

TCU

PCB PIEZOTRONICS INC

And I am glad to take any of your questions?

HOPEFULLY NOW

but later at:

p.walter@tcu.edu

817-257-6318 (office)